Ultraroof®
By Ultraframe

V15 | May 2026

Selling, surveying & specifying Ultraroof

COMPLETE GUIDE

DEAR TRADE PARTNER OR CONSERVATORY BUYER,

The Ultraroof is pre-manufactured to ensure consistent quality and a speedy installation with less waste.

PREFERRED

8 out of 10 homeowners prefer Ultraroof

- **Full length glass** panels
- **No tie bar** required
- Internal pelmet and **external soffit for lighting**
- Highly authentic slate or Metroslate shingle finish
- **Slimline** hips and ridge cappings
- 8 out of 10 homeowners would **choose to buy Ultraroof** over leading competitors*

LIGHTEST

The lightest slated roof on the market

- Weighs only 38kg/m² **lighter than any other solid slated roof**
- Designed by **conservatory specialists,** Ultraframe to replace existing conservatory roofs
- Lightweight panels are cut to size and **easy to manoeuvre**

WARMEST

Unrivalled thermal performance

- U-Value of 0.15 with option to reduce to 0.12 if required
- **Complete warm roof system**, with no cold bridging
- **Fully insulated** 380mm structural beam

FIRE TESTED

Independently and fully fire tested

- Components AND complete structure both **fully fire tested**
- **Fire test certificates** available online
- **Fire rated as B-roof** according to EN 13501-5: 2016
- **Fire rated as AC** according to BS476-3:2004

FASTEST

Faster to fit than any other solid roof

- Ultraroof slates supplied in panels of 2 slates
- 100% pre-fabrication - **no cutting required**
- **No internal battening** required
- Expandable panel and wide beam to **accommodate tolerances on site**
- High quality, **practical technical support** as you need it

STRONGEST

Unsupported spans up to 4m

- Superior strength for **larger designs** up to 6.7 by 5m
- 4M spans for **bi-folds without extra support**
- Highly configurable to **any shape and size**
- NASA satellite data used to **precision engineer every roof** for wind AND snow loads.

CONTENTS

1 SALES

	ULTRAROOF SYSTEM OVERVIEW	4
	CHECKLIST FOR SALES PEOPLE	5
	4 STAGE SALES AND DESIGN PROCESS	**4 - 21**
STEP 1	**LAYOUT -** THINGS TO CONSIDER	6
	LAYOUT PLAN	7
STEP 2	**ROOF GLAZING**	8
	BOX GUTTER OPTIONS	9
STEP 3	**ROOF STYLE -** SHAPE AND CONFIGURATIONS	10 - 13
	ROOF STYLE - RIDGE AND HIP BAR	14
STEP 4	SLATES & COLOURS	15 - 17
	LIGHTING	18 - 20
	BEAM BRACKETRY	21
	CORNICE	21

2 SURVEYORS

CHECKLIST FOR SURVEYORS	22 - 23
BUILDING REGULATIONS	24
ASSESSING THE EXISTING CONSERVATORY	25 - 26
ULTRAROOF SURVEYING GUIDELINES	27
CHOOSING YOUR BEAM POSITION AND CALCULATING ROOF SIZE	28 - 32
CALCULATING THE ROOF SIZE	33 - 34

3 SPECIFIERS

USEFUL POINTS TO REMEMBER FOR SPECIFIERS	35 - 36
BOX BEAM SOFFIT DETAILS	37
PRODUCT ASSEMBLIES	38 - 39
FIRE SAFETY PERFORMANCE	40
ROOF GLAZING - GLASS POSITIONING	40
INTEGRATED GLAZING RULES	41 - 43
CHOOSING APPROPRIATE BOX GUTTER AND SUPPORT	44 - 45
MAXIMUM ROOF SIZES AND STRUCTURAL PERFORMANCE	46
STRUCTURAL LOADS - WORKED EXAMPLE	47
STRUCTURAL SPECIFICATION	48 - 49
STRUCTURAL SUPPORT	50
UNSUPPORTED SPANS	51 - 53
STANDARD SUPPORT FOR STANDARD BOX BEAM	54
STANDARD SUPPORT FOR TAPERED BOX GUTTERS	54
BOX BEAM STRUCTURAL SUPPORT FOR 265 BOX GUTTER	55
STRUCTURAL SUPPORT - GALLOWS BRACKET - BUNGALOW SITUATION	56
GALLOWS BRACKET - CORNER	57
- INTERMEDIATE	58
STRUCTURAL SUPPORT - TIMBER STUD WORK	59 - 61
INTRUSIONS	62 - 66
BOX BEAM ON FRAME	67
BOX BEAM ON BRICK WORK	68
BOX BEAM ON HUP!69-70	
SOFFIT WIDTHS - RELATIVE TO EXTERNAL FRAME OR BRICK WORK	71
RAKED FRAME STIFFENER	72
GABLE REINFORCING GUIDANCE	73
GABLE END BRICKWORK OPTIONS	74 - 77
JOINING TWO BEAMS	78 - 79
INTERNAL BRICK BEAM JOINT	80
SUPPORTING JOINT ON POST	81
INTERNAL JOINT ON POST	82
FIXING PLATE	83
BOX BEAM ON SUPER-INSULATED COLUMNS	84
GEORGIAN ROOF ON VICTORIAN FRAMES	85
OUT OF SQUARE ROOFS	86
ROOF PITCH VARIATION / P SHAPE ROOF SCOPE	87 - 88
CONVERTING EXISTING CONSERVATORY WITH BOX GUTTER TO ULTRAROOF	89 - 93
APPROPRIATE FIXINGS / CAVITY TRAY ASSESSMENT / VERTICAL DCP REQUIREMENT	94
ACHIEVE 0.12 U-VALUE	95-97

ULTRAROOF OVERVIEW

Product definition

Ultraroof is a solid roof, perfect for the speedy replacement of tired conservatory roofs. It is a packaged solution, off site manufactured for rapid assembly and compliant with relevant Building Regulations. Ultraroof is classed as a 'warm roof' and gives a vaulted/loft type ceiling. There are three major elements to Ultraroof;

#1

INSULATED BEAMS

A patented box eaves beam, filled with mineral wool cavity insulation - that forms the soffit structure - approx 380mm front to back depth.

#2

ALUMINIUM FRAMEWORK

The hidden structural aluminium framework of ridges and hips are pre-manufactured and engineered for speed accuracy on site.

#3

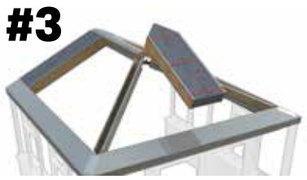

STRUCTURAL ROOF PANELS

Mechanically fixed (Ultrapanel) Structural Insulated Roof Panels are attached to the box eaves and structural framework.

Ultraroof Slate options:

Tongue and grooved 11mm OSB is then fixed before a high performance water proofing breathable membrane layer is laid. Ultraroof slate engineered copolymer interlocking slates sheet (2 slates per sheet) are then laid across the roof slope.

Ultraroof is available with Ultraroof authentic lightweight slate or Metroslate shingle finish. For more information on the slate options, please see page 15 and 16.

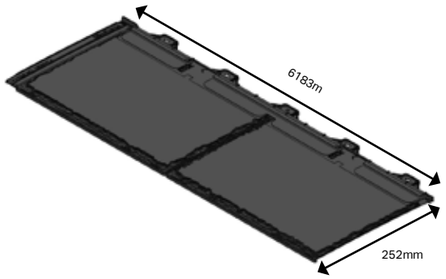

Overall dimensions : 618mm x 252mm I **10 slates per pack:** coverage is 0.113m²

Key performance criteria/simplified rules

- The product can be designed with window frames to all elevations.
- If bi-folding doors are to be used they MUST be bottom supported NOT top hung.
- The standard soffit projects approx 40mm beyond the external face of the window frame - box eaves beam is approx 380mm front to back depth.
- Pitch range - minimum is 12.5° on lean to and 15° on duo pitch - maximum pitch is 40°.
- Maximum 13° pitch variation (front to side). Georgian roofs only
- Maximum 5.5° Pitch variation over Victorian hips/faceted hipped lean-tos
- System U-Value - with the 172mm Ultrapanel is 0.15W/m2°C (0.12W/m2°C with an additional layer of 60mm PIR insulation board).
- Rectangular glass panels can be integrated to maintain light into any adjacent room. Alternatively, add one of 4 Velux roof windows/sizes.
- Everything is pre-fabricated in our highly efficient factory to ensure rapid one day fit on site.
- On a 4m x 4m Georgian, the system weight is 38kg/M² including plasterboard (12kg/M² polycarbonate roof and 30kg/M² for a glass roof).

U-Design

U-Design is a piece of design and configuration software that exclusively specifies Ultraroof. As well as visualising and pricing, upon entry of the customer's postcode it checks the wind and snow loads at the exact location to ensure Ultraroof complies with Building Regulations.

IT IS STRONGLY RECOMMENDED THAT THE ULTRAROOF INSTALLATION GUIDE IS READ AT THE SAME TIME AS THIS DOCUMENT.

HANDY CHECKLIST FOR: SELLING AND DESIGNING THE PERFECT ULTRAROOF

- [ ] 1. Choose the preferred roof shape (Georgian, Lean To, Victorian, Gable, P-shape or T-shape). Although the shape of most Victorian Conservatories can be replicated like for like, if the facets are uneven the Tudor Roof may be used. See pages 11 and 78.
- [ ] 2. Ask the customer precisely where they would prefer the glass in the roof. Ultraroofs full height rectangular glass panels are the most cost effective way to add glass, but are only available when adjacent to the ridge. Velux also can be used and located in most places on the roof. Refer to pages 8, 33-36.
- [ ] 3. Some box gutters may need internal beam support (see pages 37-38). If the customer wishes to change the box gutter type to avoid internal support this may restrict the placement of the glass. On some roofs there may be a trade off between internal support and glass placement. Read pages 43-54 and discuss this with the customer.
- [ ] 4. When a box beam is next to a host wall and a tapered gutter is used, the box beam will always be supported by a 90° angled wall bracket (see page 47). All 265mm box gutters require supporting under the beam. Roof glazing choice must be considered when choosing box gutter type. See pages 37-38 and 43-54.
- [ ] 5. The box beam has a maximum length of 7m but beams can be jointed. Where the joints are located, supports are required see pages 6 and 71-76.
- [ ] 6. The beam cannot run unsupported over 4m. Avoid building bi-fold doors over 4m spans into the design to avoid the need for extra structural support. See pages 43-54.
- [ ] 7. Building Regulation compliance is required for SOLID roof conversions and new build extensions. See page 22.
- [ ] 8. Use the guide to explain how the soffit will look to the customer. See pages 30 and 60.
  Soffits over the window frames are available in 40mm and 151.5mm. Refer to page 61 and 62 to identify the right soffit on masonry. Please note, the 151.5mm soffit is the only option compatible with super insulated columns.
- [ ] 10. Obtain the POSTCODE so that wind and snow loads can be checked. If you suspect these loads may be high refer to pages 39-42 to understand maximum potential roof sizes available.
- [ ] 11. There are many choices of finish to the Ultraroof, much more than slates. Ensure you have decisions from the homeowner on everything in the design. See pages 14-19.
- [ ] 12. Agree the roof pitch with the customer. Every roof must be pitched in full degrees (e.g. not 25.5°), duo pitches range from 15°- 40° and Lean To's start at 13° - 40°. The only exception to this rule is the lowest Lean To pitch possible which is 12.5°.
- [ ] 13. The maximum pitch difference over a Georgian hip is 13°
  The maximum pitch difference over Victorian/faceted hipped lean-to 5.5°
- [ ] 14. Design the lighting layout with the customer. LED spotlights can be placed within the internal pelmet or added using a board at the ridge. Pendant lights can look particularly striking from the ridge of the new roof.
  See page 18 for lighting positions on the box beam.
- [ ] 15. Curved Cornice - perfect for a more traditional build. The curved Cornice provides the ideal finishing touch to the roofline that both hides gutter and creates a beautiful silhouette. See page 19.

Always consult us, if there is something you are uncertain about, please call technical helpline on 01200 452 918 or email techsupport@ultraframe.co.uk

4 STAGE SALES AND DESIGN PROCESS

STEP 1 - LAYOUT - THINGS TO CONSIDER

Any floor plan can be built, 3 & 5 bay victorians, and now P-shapes or T-shapes can be replaced. Stretch Victorian roofs can be accommodated.

The maximum length of Ultraroof beams are 7m but two can be joined together, however you will need a post or column where the beams join. Ensure the joint positioning is aligned with door or window frames. Refer to page 71-72 for detailed information.

BOX BEAM JOIN BOX BEAM JOIN

BOX BEAM JOIN

Ultraroof has 2 soffit widths 40mm and 151.5mm, see soffits shown on frames below (enlarged on p60). Discuss with the homeowner re width of soffit required on brick work and frames. See page 61 and 62.

STANDARD SOFFIT 40MM

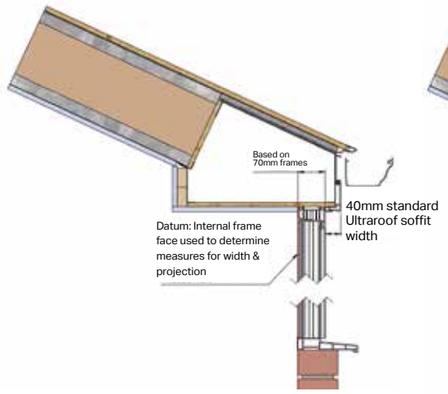

EXTENDED SOFFIT 151.5MM

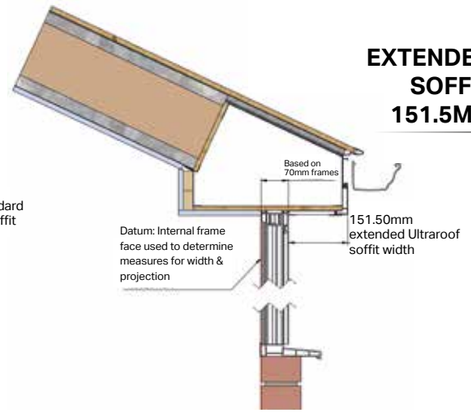

IF BOX BEAM SAT ON BRICKWORK SEE PAGES 61 AND 62.

Super-insulated columns can easily be integrated with Ultraroof. An extended soffit must be used with super-insulated columns. See page 77.

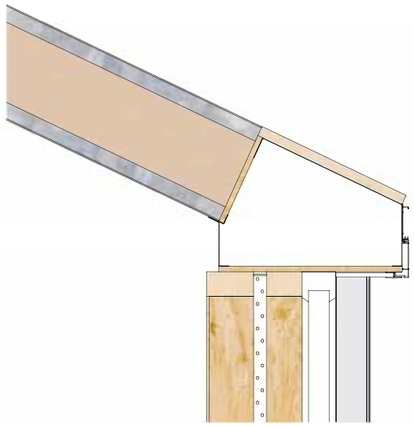

4 STAGE SALES AND DESIGN PROCESS

STEP 1 - LAYOUT PLAN

Show positioning of all walls (their heights), door openings, windows and expected soffit width. Ensure the correct soffit is specified taking account whether the facets have frames, masonary or a combination of both.

EXAMPLE BELOW:
Form to fill in

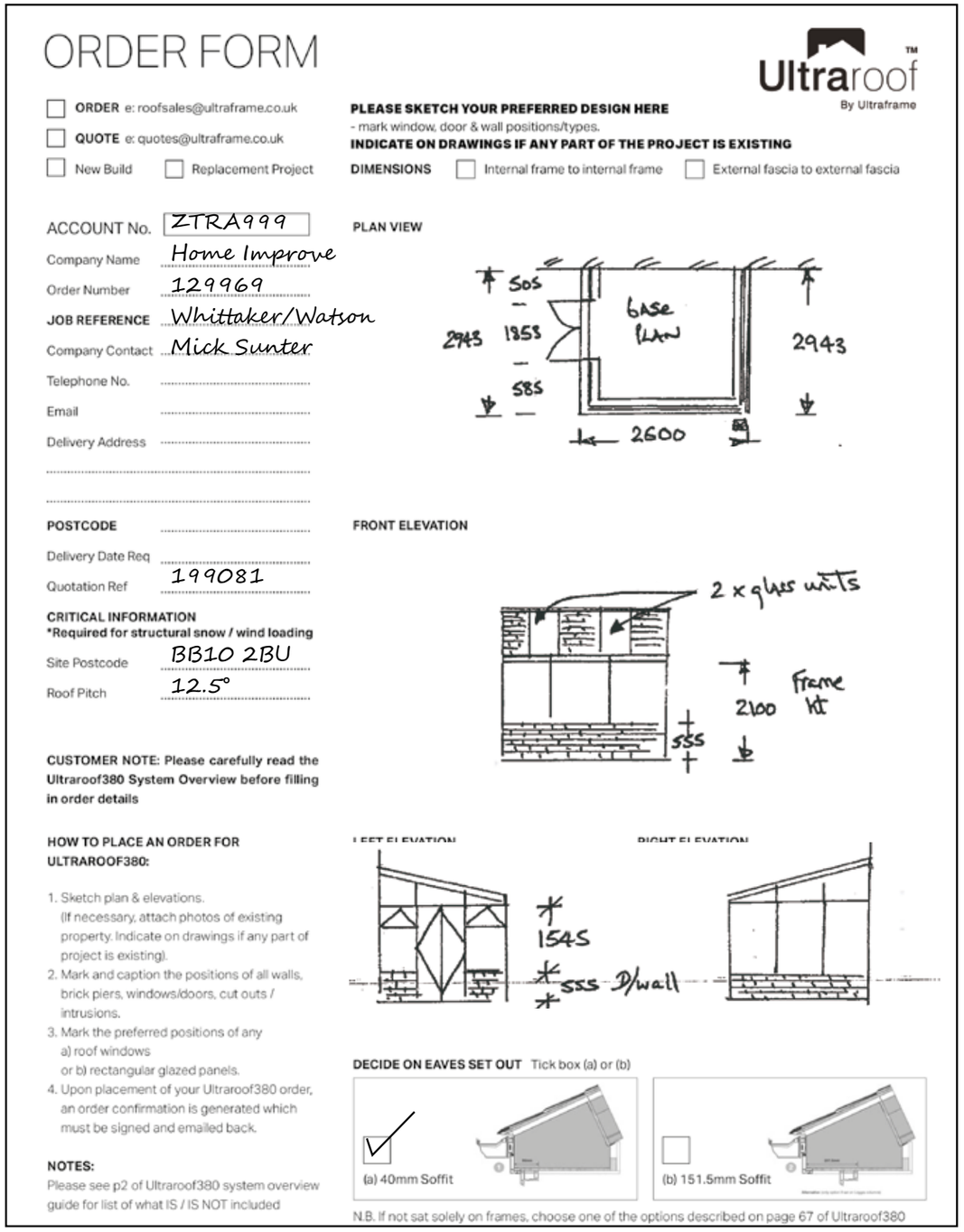

ORDER FORM

Ultraroof™ By Ultraframe

☐ ORDER e: roofsales@ultraframe.co.uk
☐ QUOTE e: quotes@ultraframe.co.uk
☐ New Build ☐ Replacement Project

PLEASE SKETCH YOUR PREFERRED DESIGN HERE
- mark window, door & wall positions/types.
INDICATE ON DRAWINGS IF ANY PART OF THE PROJECT IS EXISTING
DIMENSIONS ☐ Internal frame to internal frame ☐ External fascia to external fascia

ACCOUNT No. ZTRA999
Company Name Home Improve
Order Number 129969
JOB REFERENCE Whittaker/Watson
Company Contact Mick Sunter
Telephone No.
Email
Delivery Address

POSTCODE
Delivery Date Req
Quotation Ref 199081

CRITICAL INFORMATION
***Required for structural snow / wind loading**
Site Postcode BB10 2BU
Roof Pitch 12.5°

CUSTOMER NOTE: Please carefully read the Ultraroof380 System Overview before filling in order details

HOW TO PLACE AN ORDER FOR ULTRAROOF380:

1. Sketch plan & elevations. (If necessary, attach photos of existing property. Indicate on drawings if any part of project is existing).
2. Mark and caption the positions of all walls, brick piers, windows/doors, cut outs / intrusions.
3. Mark the preferred positions of any a) roof windows or b) rectangular glazed panels.
4. Upon placement of your Ultraroof380 order, an order confirmation is generated which must be signed and emailed back.

NOTES:
Please see p2 of Ultraroof380 system overview guide for list of what IS / IS NOT included

PLAN VIEW

FRONT ELEVATION

LEFT ELEVATION **RIGHT ELEVATION**

DECIDE ON EAVES SET OUT Tick box (a) or (b)
☑ (a) 40mm Soffit
☐ (b) 151.5mm Soffit

N.B. If not sat solely on frames, choose one of the options described on page 67 of Ultraroof380

4 STAGE SALES AND DESIGN PROCESS

STEP 2 - ROOF GLAZING

Select from INTEGRATED ROOF PANELS or VELUX ROOF WINDOWS, See seperate guide.

NOTE: If the roof design incorporates a box gutter, the box gutter type chosen will dictate your glazing option. Refer to pages 37-38.

Full glass

No glass

Velux
SEE SEPERATE GUIDE

4 STAGE SALES AND DESIGN PROCESS

STEP 2 - BOX GUTTER OPTIONS

There are two box gutters available. 265mm and tapered.

Some box gutters may need internal beam support (see pages 37-38). If the customer wishes to change the box gutter types to avoid internal support this may restrict the placement of the glass. On some roofs there may be a trade off between internal support and glass placement. Integrated glass panels from ridge down to 265mm box gutters. Velux roof windows only down to tapered box gutters.

Limitations imposed by box gutter.

265MM BOX GUTTER

1. 265mm wide fabricated box gutter.
2. Must be used off fascia boards.
3. Must be used against vertical walls (when integrated glass specified).

* See pages 55-59 for intrusions and pages 43 - 54 for structural support options.

NOTE: BOX BEAM MUST ALWAYS BE SUPPORTED WHEN USING A 265MM BOXGUTTER

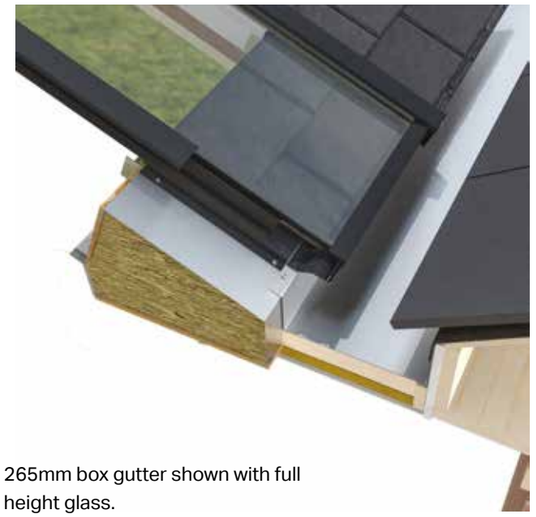

265mm box gutter shown with full height glass.

TAPERED BOX GUTTER

1. Used when box beam abuts host wall (no integrated glass panels)
2. Used when Ultrapanels strike host wall.

No supplementary support required.
Up to 7m in length.
Jointed beams would require support.

Tapered box gutter

4 STAGE SALES AND DESIGN PROCESS

STEP 3 - ROOF STYLE - SHAPE

Decide the roof shape best suited to the floor plan.

Lean-to

Georgian / Edwardian

Hip Back Georgian / Edwardian

Gable

3 bay Victorian

5 bay Victorian

P-Shape

T-Shape

4 STAGE SALES AND DESIGN PROCESS

STEP 3 - ROOF STYLE - SHAPE

Tudor. See page 78 for details.

Existing Victorian shaped roofs can be replaced with a Georgian shape with a canslatever overhang which could include a lighting feature. This is particularly useful if the facets are unequal.

Out of square.

Ultraroof can accommodate out of square existing buildings due to the wide nature of the beam. The soffit line will taper on both the inside and outside but the roof will remain square. The 151.5mm extended soffit MUST be used in this situation.

In extreme cases it might be better to recommend a re-build to make it square. See example below.

The deviation that is possible on standard 40mm soffit without on site modifications to parts is 10mm.

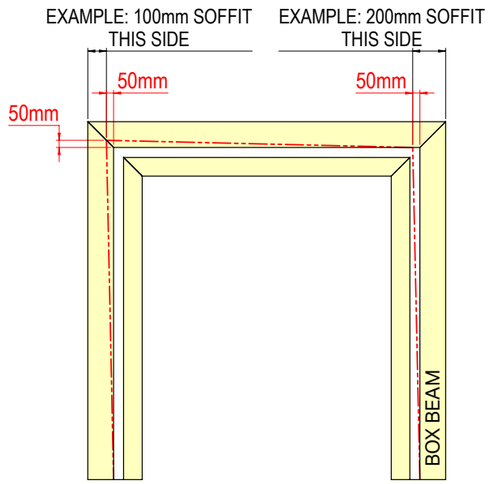

4 STAGE SALES AND DESIGN PROCESS

STEP 3 - ROOF CONFIGURATION

Current Roof Shapes:

- Design and pricing available in U-Design

For roof shapes outside this present scope, please contact for advice.

Lean to

P-Shape (Standard Valley)

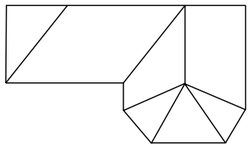

P-Shape (Zero return valley)

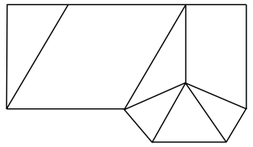

Georgian

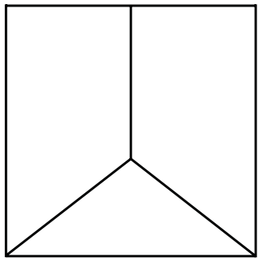

Double Hip Georgian

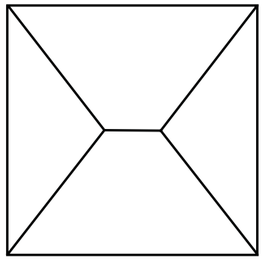

3 Bay Victorian

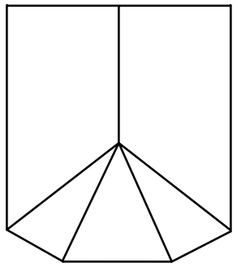

5 Bay Victorian

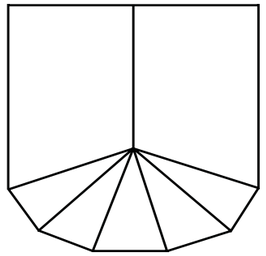

Gable

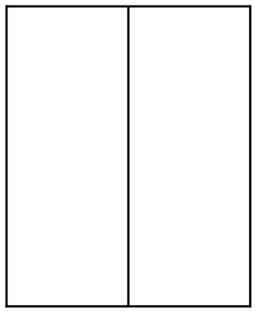

Cut- outs

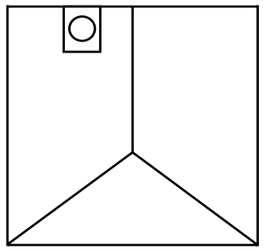

Hipped Lean To

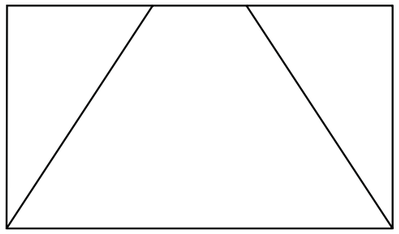

Stretched Front Facet Victorian

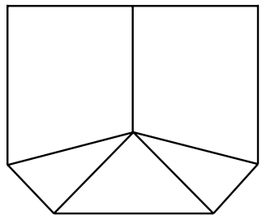

L Shape Wraparound

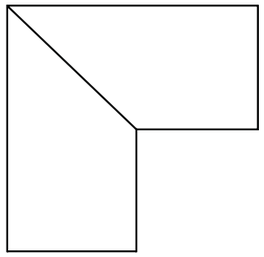

4 STAGE SALES AND DESIGN PROCESS

STEP 3 - ROOF CONFIGURATION

Floating Ridge

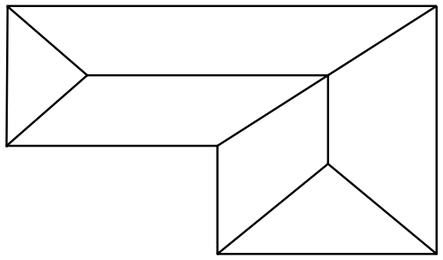

Georgian Victorian

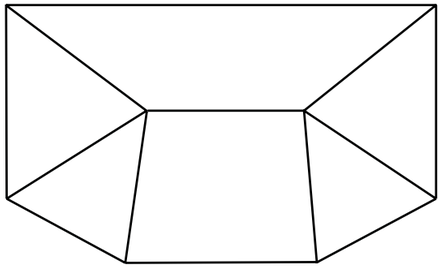

Hybrid

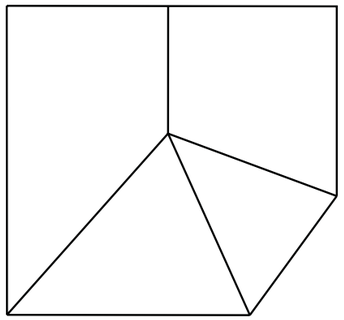

T Shape with hipped ends

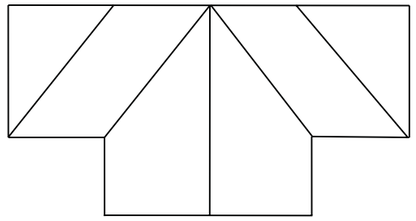

T Shape

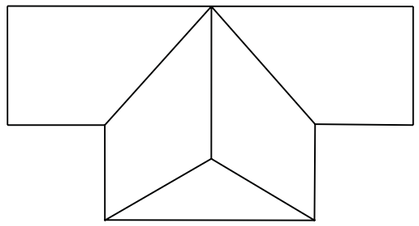

Drop valley and gull wing

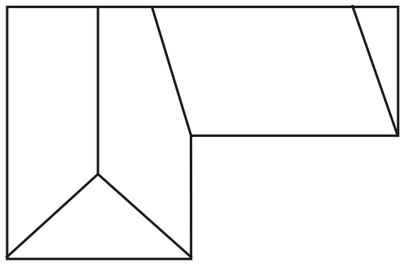

1
SALES
4 STAGE SALES AND DESIGN PROCESS

4 STAGE SALES AND DESIGN PROCESS

STEP 3 - ROOF STYLE - RIDGE & HIP BAR

Ridge and hip slates are available for Ultraroof but not recommended in certain situations due to the additional trimming and fitting required on site.

ULTRAROOF OPTIONS	RECOMMENDED aluminium hip and ridge capping	Slate finishing details
Georgian solid or with Velux roof window	YES	Fitted to timber batons and trimmed at intersection point on site. (Trimming approx 30 min)
Georgian with integrated rectangular glass	YES	
Victorian 3/5 bay solid or with Velux roof window	YES	Fitting/trimming of slates at intersection point takes 2/4 hours on site. Aluminium capping option gives a neater solution.
Victorian 3/5 bay with integrated rectangular glass	YES	

The most popular choice by far is aluminium top caps

- ✔ **Increases profit**
- ✔ **Fast to fit**
- ✔ **Lower cost**

4 STAGE SALES AND DESIGN PROCESS

STEP 4 - COLOUR

Ultraroof Slate options:

Ultraroof is available with authentic lightweight slates in three colours or a Metroslate shingle finish in four slate colours.

Authentic lightweight slate

The Ultraroof slate polymer roofing system not only replicates the natural look of slates but is easier to install and less expensive without incurring the extra structural cost needed to accomodate conventional slate roofing. The Ultraroof slate polymer roofing system is also designed to outperform and be more cost-effective than any other synthetic slate slate replica system on the market.

- 2 slates per panel, packed in bundles of 10 as standard.
- Authentic looking slate
- Much lower cost than fitting traditional slates
- Lightweight co-polymer material - easy to install and transport
- Spacing and fixing guides making the slates extremely quick to fit
- Fire resistance to National Class AC (as refered to in Building Regulations)
- Resistance to discolouration (U.V. rays)
- Perfect for replacement or new build projects
- Made from 100% recyclable material
- Virtually maintenance free
- Cut on size to allow for on site tolerances and size variations
- Overall dimensions 618mm x 252mm. Coverage is 0.113m²

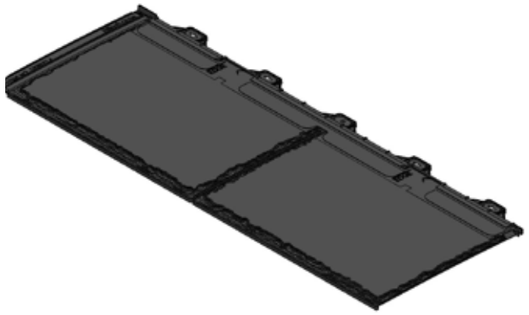

Carbon Grey

Brown Umber

Terra Brick

Metroslate shingle finish

Ultraroof Metroslate is available in three colours with a choice of slimline aluminium or Metroslate cappings.

Slimline Aluminium Cappings

Charcoal
with Urban Grey caps

Burnt Umber
with Brown Umber caps

Antique Red
with Red caps

Metroslate Cap-

Charcoal

Burnt Umber

Antique Red

The pictures of slates are used for illustration purposes only. Refer to sample for accurate slate colour.

4 STAGE SALES AND DESIGN PROCESS

STEP 4 - COLOUR

Customers can choose the colour of guttering, fascia/barge board, downpipes, gables support cladding. See page 17 for the colour choices available.

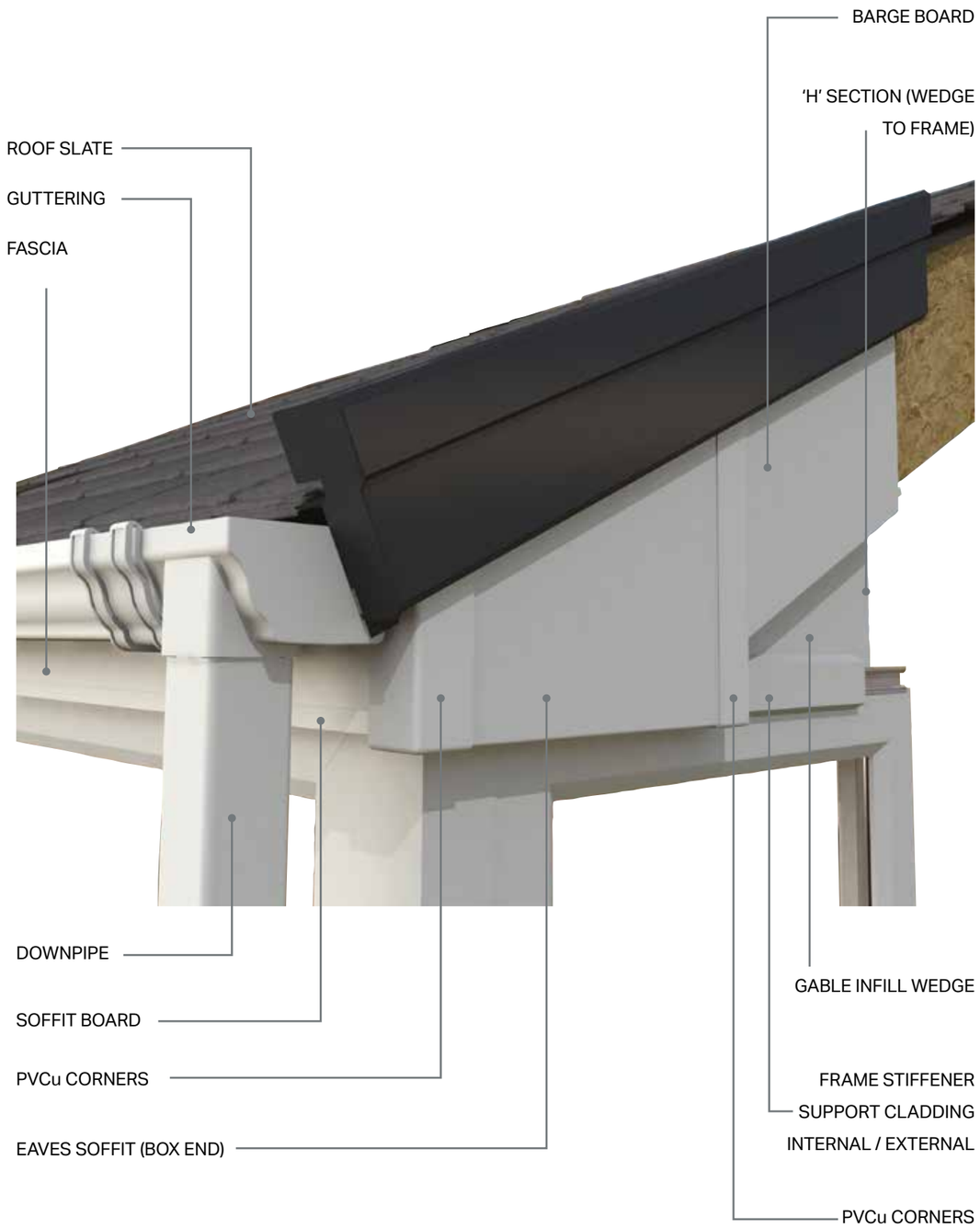

4 STAGE SALES AND DESIGN PROCESS

STEP 4 - FINISHING TOUCHES - COLOUR

	General Parts and Trims					Ultraroof Slate			Metroslate		
	White	Light Oak	Mahogany	Black	Grey RAL7016	Carbon Grey	Brown Umber	Terra Brick Bespoke Colour	Charcoal Grey	Antique Red	Burnt Umber
Roofline Trims/ Guttering	Y	Y	Y	Y	Y	N	N	N	N	N	N
Ultraroof Slate	N	N	N	N	N	Y	Y	Y	N	N	N
Slimline Aluminium Ridge/ Bar Cappings	N	N	N	N	N	Y	Y	Y	N	N	N
Metroslate Products	N	N	N	N	N	N	N	N	Y	Y	Y

Notes:
• Certain "Brown" coloured or foiled parts are only available in one format. E.g. down pipes are brown solid colour and not foiled, soffit and barge boards are only ever Rosewood.

4 STAGE SALES AND DESIGN PROCESS

STEP 4 - FINISHING TOUCHES - LIGHTING

Standard or extended soffit lighting

Internal lighting can be installed with a standard or extended soffit. Surface mounted lighting can be used externally on the extended soffit. Downlighters must be LED IC (Insulation Contact) fire rated. External lights must be waterproof, low voltage and suitable for external use.

STANDARD SOFFIT

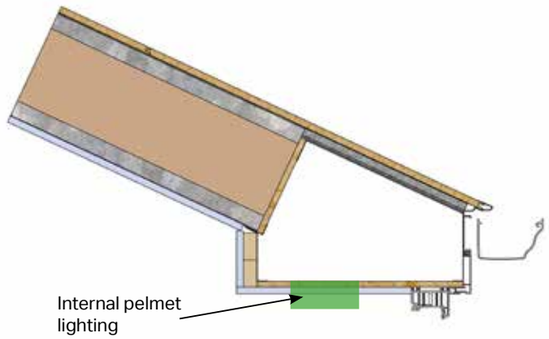

EXTENDED SOFFIT

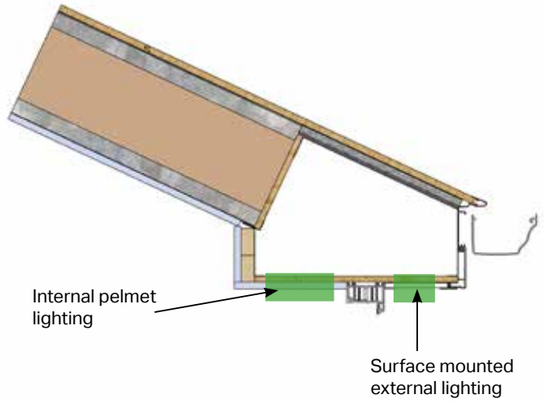

4 STAGE SALES AND DESIGN PROCESS

STEP 4 - LIGHTING

All electrical work must be carried out by a qualified electrician and tested in accordance with current **BS7671 IEE** wiring. It is the responsibility of the installing company/electrician to obtain the correct downlighters for installing into the vaulted part of ceiling.

IT IS IMPORTANT THAT A LIGHTING PLAN IS DRAWN UP BEFORE STARTING TO INSTALL ANY DOWNLIGHTS, THE DOWNLIGHTS CENTRES MUST NOT BE CLOSER THAN 130 mm FROM THE PANEL EDGES.

Creating a service void by battening off the internal clip aids the routing of electrical cables between panels if lighting is to be installed in the ceiling vaulted area.

ALL DOWNLIGHTS MUST BE USED IN CONJUNCTION WITH THERMAHOOD OR SIMILAR IF IT IMPACTS WITH THE PANEL INSULATION, THIS MUST BE SEALED TO THE REFLECTIVE VAPOUR CONTROL LAYER. LIGHTS USED MUST BE LED'S AND HAVE A FIRE RATING OF 30MIN, HAVE AN IP65 RATING AND BE INSULATION COVERABLE (IC).

NOTE: CERTAIN IC DOWNLIGHTERS CAN NOT BE PLACED NEAR COMBUSTIBLE MATERIAL LIKE EPS. IF THE LABEL SHOWN ON PAGE... IS NOT VISIBLE - THE DOWNLIGHTER IS NOT TO BE POSITIONED NEAR COMBUSTIBLE MATERIAL.

Care must be taken to ensure PVC coated electrical cables do not encounter EPS. If there is a risk of this, wiring should be placed through conduit.

Always read the lightning manufacturer guidelines, depending on the type/size of downlighter. It may be possible to increase the batten size to remove the need of the Thermahood (see page).

INSTALLING THERMAHOOD + VCL

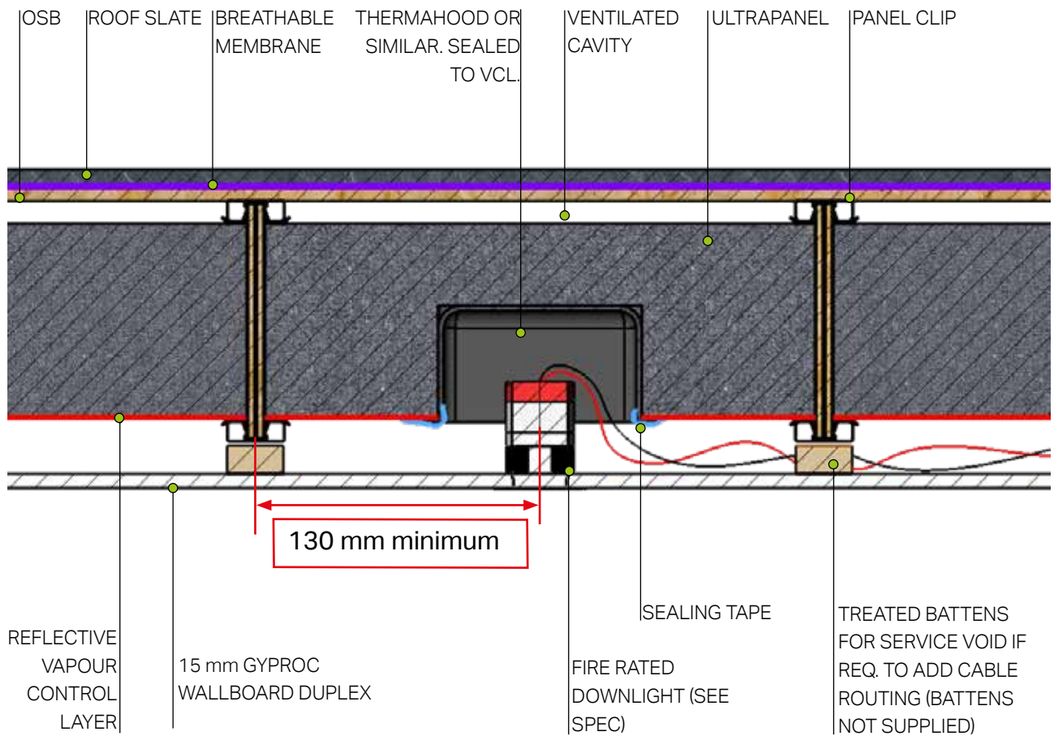

4 STAGE SALES AND DESIGN PROCESS

STEP 4 - LIGHTING

INSTALLING THERMAHOOD + VCL

Increase batten size to remove the need of Thermahood

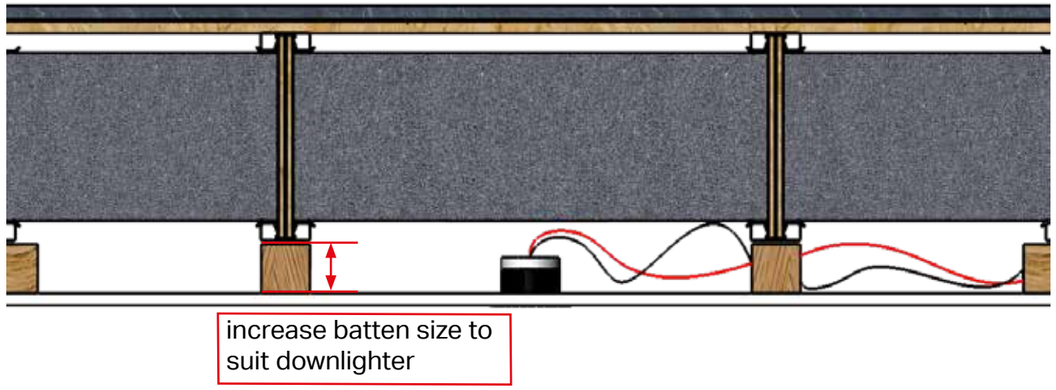

INSTALLATION SEQUENCE

1

RECOMMENDED DOWNLIGHT FITTING:
All dimensions in this guide have been calculated using Aurora mPRO downlight, when using other downlighters always refer to manufacturer guidelines. Check page.... for our alternative recommendations. Downlight hood is also recommended.

2

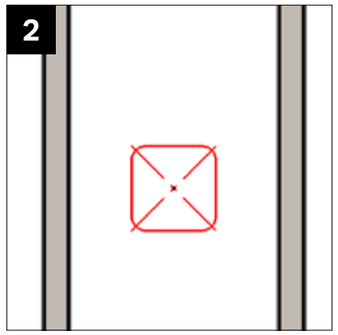

MARKING UP:
Once you have worked out where the downlightes will be placed, mark downlight centres and downlight hood outline onto the reflective membrane. This shape should be cut out of the reflective membrane prior to EPS cutting.

3

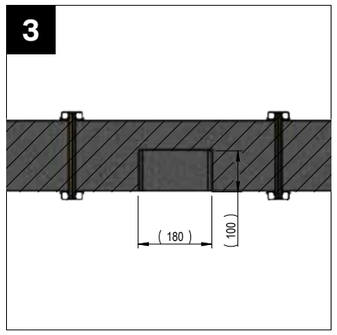

EPS CUTTING:
Using a hole saw attachment on your drill, repeatedly gouge out the membrane and eps in the square you have drawn 100 mmdeep until you create a pocket for the downlight hood to sit in. Do not drill through all the EPS as this will affect the thermal performance.

4

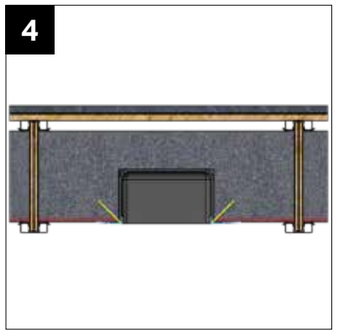

THERMAHOOD INSTALLATION:
Fit Thermahood into precut hole, hold into position using 100mm screws as shown (yellow line). Seal the Thermahood to the reflective membrane (red line) using foil tape.

5

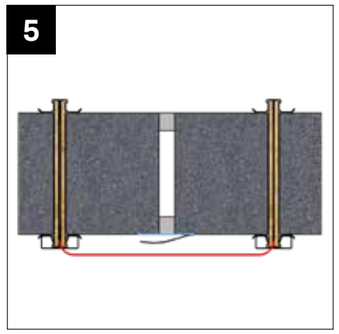

BATTENING:
Once all panels are on the roof, cut the panel straps keeping the tolerance panel from expanding. Seal the tolerance panel by covering the panel with tape as shown (blue line). The tape is already on the panel with half of the backing paper still on.

4 STAGE SALES AND DESIGN PROCESS

STEP 4 - LIGHTING

INSTALLATION SEQUENCE

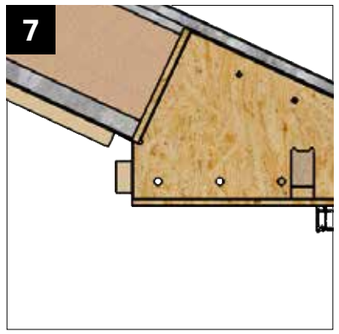

BATTENING:
We recommend battening off from each clip and along the internal length of the box beam to creat a service void if required (see page...) for channelling wiring across the ceiling area.

PLASTERING:
Plasterboard and plaster as normal.

RECOMMENDED DOWNLIGHTERS

H2 LITE 500 CSP

FULL DETAILS ON:
https://www.collingwoodlighting.com

OVIA INCEPTOR OMNI TRI-COLOUR FIRE RATED DIMMABLE LED DOWNLIGHT

FULL DETAILS ON:
https://www.electrical2go.co.uk

H2 LITmPRO™FIXED IP65 DIMMABLE FIRE RATED DOWNLIGHT

FULL DETAILS ON:
https://www.auroralighting.com

4 STAGE SALES AND DESIGN PROCESS

STEP 4 - BEAM BRACKETRY

Following customer feedback your Ultraroof eaves beam has been updated to include additional brackets on the internal corners to support the mitred joint. If you receive these brackets with your order please fit as shown below.

NOTE: These brackets not specified on variable pitch roofs.

15° to 19° Roof Pitch

WPBBF090
U380 90° INTERNAL CLEAT STRAP
1 PER MITRE

WPBCS 135
U380 135° INTERNAL CLEAT SMALL
1 PER MITRE

WPBCS 150
U380 150° INTERNAL CLEAT SMALL
1 PER MITRE

20° to 29° Roof Pitch

WPBBF 090
U380 90° INTERNAL CLEAT STRAP
1 PER MITRE

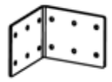

WPBCM 090
U380 90° INTERNAL CLEAT MEDIUM
1 PER MITRE

WPBCM 135
U380 135° INTERNAL CLEAT MEDIUM
1 PER MITRE

WPBCM 150
U380 150° INTERNAL CLEAT MEDIUM
1 PER MITRE

30° to 40° Roof Pitch

WPBBF 090
U380 90° INTERNAL CLEAT STRAP
1 PER MITRE

WPBCL090
U380 90° INTERNAL CLEAT LARGE
1 PER MITRE

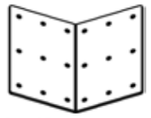

WPBCL 135
U380 135° INTERNAL CLEAT LARGE
1 PER MITRE

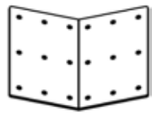

WPBCL 150
U380 150° INTERNAL CLEAT LARGE
1 PER MITRE

STEP 4 - CURVED CORNICE

Curved Cornice in white or grey only. Super-insulated column compatible. Super-insulated column concealed downpipe is not possible. 90° and 135° external corner cover angles only.

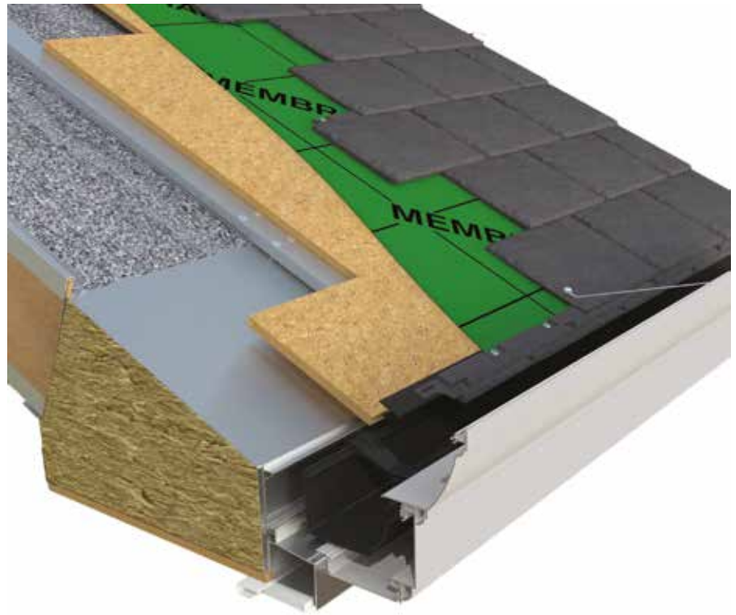

90° Cornice return on gable fronts

HANDY CHECKLIST FOR: SURVEYING ULTRAROOF

GENERAL

- [ ] 1. Is planning permission needed?
  If yes, who will apply?
- [ ] 2. Is there sufficient access to the proposed building?
  Including height and width restrictions for delivery of material, concrete, frames, glass & welded cills etc?
- [ ] 3. Will construction involve crossing any public or neighbours path, garden, wall or hedge?
- [ ] 4. Will you need a skip on site?
- [ ] 5. Are there plants, bushes, trees, sheds, fish-ponds in the way?
- [ ] 6. Are there any other visible obstructions on the ground?
- [ ] 7. Is the house wall sufficiently out of plumb to require any allowance in the design of the roof? See page 27.
- [ ] 8. Are there any signs of settlement or hairline cracks in the house wall - have these been pointed out to the customer?
- [ ] 9. Is there a soil vent pipe, RWP, extractor fan or gas flue in the way of the proposed roof?
- [ ] 10. Are there any existing window or door openings to be moved, altered or bricked up?
- [ ] 11. New openings to existing property will require new lintels which will require building regulation approval. See page 22 - building regulations.
  Fitting Ultraroof does not guarantee the removal of seperating doors.
- [ ] 12. Are there any existing window or door openings to be included within the newly proposed extension?
- [ ] 13. Is there a height restriction above the proposed roof ie. a bedroom window?
- [ ] 14. Ensure there is enough room above the ridge to lead flash?
- [ ] 15. If installing to a bungalow fascia, lift the front row of slates, check that the roofing felt over the projecting eaves is in good condition or it will need to be replaced.
- [ ] 16. Will the new extension roof fit below the bungalow soffit board?
- [ ] 17. Will the new extension roof fit to the bungalow fascia board?
- [ ] 18. Ensure the fascia is deep enough and in good enough condition?
- [ ] 19. When installing a roof to the fascia is there enough room to re-fit the existing gutter?
- [ ] 20. Will the Ultraroof overhang a boundary wall? With a standard soffit Ultraroof is 90mm wider than a standard conservatory roof on both sides and 202mm wider when the extended soffit is used.
- [ ] 21. Has the right box gutter been specified? Refer to page 9.
- [ ] 22. Will the box beam need any structural support? Any unsupported box beam over 4m needs structural support (Gallows, brick piers, timber stud work). Refer to pages 43-54.
- [ ] 23. Will an extended soffit be needed? (e.g. with Super-insulated or brickwork columns)
- [ ] 24. Is there enough space on the house wall to allow for the box beam. It should not cut across openings on the host wall.

Always consult us, if there is something you are uncertain about, please call technical helpline on 01200 452 918.

HANDY CHECKLIST FOR: SURVEYING ULTRAROOF

REPLACEMENT

- [ ] 1. Are there any "hairline cracks" within the existing base and walls to establish whether the existing structure is sound.
- [ ] 2. Are the existing window frames in good condition or is there for example evidence of cracking welds within the frames.
- [ ] 3. What are the internal and external frame sizes and relevant apertures?
  These must all be measured to ensure the desired overhang is achieved.
- [ ] 4. Will existing cavity trays and flashing need to be moved? Ultraroof sits higher on the slope. (27.5mm higher with a standard soffit and 79.5mm higher with an extended soffit.*)
  Compared to Classic Roof 4000mm internal width at 25° pitch

NEW BUILD

- [ ] 1. Are there any existing structures to demolish?
- [ ] 2. Is there an existing patio or path to be removed?
- [ ] 3. Is there an existing retaining wall - will this need re-constructing?
- [ ] 4. Are there any projecting bell casts, soldier courses, key stones in the way?
- [ ] 5. Are there any TV, satellite or telephone cables in the way?
- [ ] 6. Are there air bricks or head ventilators in the existing extension?
- [ ] 7. What is the existing external wall finish - Facing brick, stone, render or pebbledash to match to?
- [ ] 8. If facing brick, is a cavity tray required?
- [ ] 9. Will you need to install a vertical damp proof course where the side frames abut the house/bungalow wall?
- [ ] 10. Are there any existing underground drainage pipes to be moved or built over?

NEW BUILD

- [ ] 11. Is there an existing manhole to be moved or raised to the new extension floor level then sealed with an airtight cover?
- [ ] 12. Are there any pipes or cables to be catered for in the proposed build?
- [ ] 13. Will the difference in house floor level and the proposed new extension floor level require steps?
- [ ] 14. Will the difference between the proposed new extension floor level and the outside ground floor level need a landing, steps and handrail?
- [ ] 15. Is a dwarf wall required - what height?
- [ ] 16. Are there squint bricks or stone quoins required or will you cut and bond bricks?
- [ ] 17. Are there any new openings required in the proposed basework for doors?
- [ ] 18. Is the site sloping away requiring extra height to the basework?
- [ ] 19. Is the site sloping towards the basework requiring excavation?
- [ ] 20. Will a retaining wall be needed?
- [ ] 21. Is a new path or patio area required?
- [ ] 22. Check coursing and spacing of brickwork against existing - ie Imperial or Metric
- [ ] 23. Is the new extension rainwater to discharge into an existing gulley or is a new gulley required?
- [ ] 24. Is there a sufficient number of rainwater outlets for the size of roof?
- [ ] 25. Is there an existing gulley to move?
- [ ] 26. Has all the detail been discussed and agreed with the customer?

BUILDING REGULATIONS

Building regulations are required when up-grading/ replacing an existing conservatory polycarbonate or glass roof to a solid roof. Why?... principally for 3 reasons:

1. The work is a material alteration (structural alteration)
2. The roof must comply thermally with part L (a thermal improvement)
3. The supporting structure (vertical frames and base work) are capable of supporting the increased load.

It is also argued that providing the 'thermal separation' is maintained (i.e.: the original or newly complaint door set separating the conservatory from the main dwelling) then Building Regulations approval is NOT needed, as it remains a conservatory (unless over 30 sqm). But be reminded Building Regulations are still required for the roof convertion. Removal of the 'thermal seperation' alters the status. The conservatory is now no longer exempt.

So 'changing the status' is the principal reason why local authority or private sector approved inspector must be consulted to advise on a full investigation of the existing structure to check for thermal, structural stability and integrity. Conveyancing solicitors insist a Building Regulations Approval 'certificate of conformance' must be obtained on the installation of a solid roof conversion. The certificate will ensure the homeowner as the necessary documentation when selling their property.

Ultraroof meets building regulation requirements. To ensure the design is fit for purpose, please provide the postcode so that wind and snow are applied correctly to the design. In addition to the quotation we can provide a thermal report to enable SAP calculations to support the building regulation application.

ENGLAND & WALES - REPLACEMENT ROOFS

Building regulations for solid replacement roof projects can be applied for EITHER through the Local Authority Building Control Department OR through a private sector Approved Building Control Inspector i.e. Stroma.

The design details for Ultraroof has been registered with Stroma, an Approved Building Control Inspector who have audited the Ultraroof manufacturing process. Stroma's inspectors provide a consistent and informed service when applications are made to them, typically with only one inspection visit arranged directly with the householder. For more details visit www.UR380info.com

ENGLAND & WALES - NEW BUILDS

Building regulations for new build projects can be applied for EITHER through the Local Authority Building Control Department OR through a private sector Approved Building Control Inspector.

Stroma offer building control service for new build projects, with up to six visits to site if required depending on the complexity of the project. Please visit www.UR380info.com to download details of Stroma's costs and service.

SCOTLAND

A building warrant is required for all roof replacement and extensions in Scotland. An SER (Structural Engineers Report) is typically required as part of the warrant application. Please consult us, if you need advice on structural engineers who have experience with Ultraroof.

MAKE AN ENQUIRY
- Email enquiry/quote form to quotes@ultraframe.co.uk
- Always include site postcode

RECEIVE A QUOTE
- Structural Design Report
- Thermal Report
- Quote

OBTAIN SER REPORT
- Retailer commissions a Structural Engineer to provide SER for complete structure
- Send Structural Design Report to Structural Engineer

SAP CALCULATION
- Retailer commissions Engineer to provide SAP calculations
- Send Thermal Report to SAP Engineer

WARRANT APPLICATION
- Apply to local Authority Building Control for approval
- Send Warrant Application with SER and SAP Calculation

Planning permission and Building Regulations can be a tricky subject when building home extensions, so it's important to refer to the most relevant and up-to-date information. The Planning Portal (https://www.planningportal.co.uk/) is the best source of information for Planning and Building Regulation information for conservatories and extensions. Also, please download the GGF's 'A Guide to Good Practice' for a detailed overview of the specification and installation of conservatories within the United Kingdom.

ASSESSING THE EXISTING CONSERVATORY

Changing the roof on a previously exempt conservatory from glazing to solid panels means that you have changed the status of the structure.

The new roof is seen as an improvement and MUST comply with parts of the Building Regulations (this assumes the doors separating the house and conservatory are retained). There is a caveat – the replacement roof should not make the condition of the existing structure worse – this relates to the ability of the existing side frames and foundations to carry the additional loads imposed by the solid roof. It is necessary to undertake some structural checks that MAY lead to additional site works.

Adequate support from the existing structure is required in three main areas by:
1. Window frames.
2. Mullions/corner posts.
3. Foundations.

PVCu WINDOW FRAMES

The primary fixing method of the roof is at the house wall and through the head of the window frames and into the beam. At the corners fixing is made through the existing frames into the OSB corner sheves (which are supplied) and into the beam. When fitting Ultraroof onto the existing frames, then the side frames may need de-glazing to allow fixing of box eaves beam. Use bay pole fixings or similar at 450 centres and no more than 200mm from each eaves end/corner (not provided).

CORNER POSTS

Unreinforced PVCu Frames. If at survey stage there is no reinforcement within the PVCu frames it may be necessary to replace the corner posts. The dead load of Ultraroof is 38Kg/m² plus the snow load which as a minimum is typically 60kg/m². On a 5m x 5m Georgian roof for example, the load is 2803Kg which translates to a maximum loading at each corner of 7kN.

Using the table to the right it can be seen that an aluminium corner post of 50mm square hollow section with a 2mm wall will be adequate - generally corner posts will be larger than this. At survey stage it may be difficult to confirm the presence of the aluminium inside the PVCu sleeve until the roof is removed. Assuming new frames are not being installed, it may be advisable to send with the fitters some spare corner posts to swap with the existing.

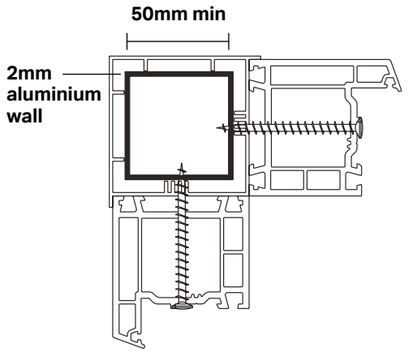

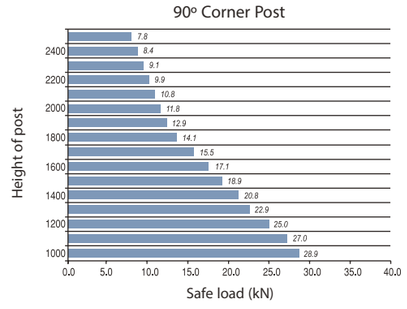

ASSESSING THE EXISTING CONSERVATORY - GUIDELINES

MULLIONS

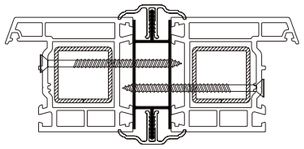

An aluminium mullion performs a number of functions, namely;
- acting as a wind post to prevent deflection of the frames by wind pressure
- to support the roof's eaves beam
- to assist with the connection of the side frames.

Mullion as a wind post:- the size of the mullion depends on the height of the frame. With full height frames (2100mm) the mullion needs to be the full front to back depth of the window frame and at least 20mm wide.

Adding mullions to existing frames is not really viable – this option should be considered if the consumer has requested new frames/doors. Should the PVCu frames be replaced, the insertion of suitable mullions can obviate the need for reinforcement in the frames (as far as structural reasons are concerned) – when using mullions, always place a 20mm washer behind the head of the screw to spread fixing loads.

FOUNDATIONS

Once you deem the foundations to be fit for purpose, you will need to state this on your Building Regulations form. You may need to do a test dig if you are unsure, but this is not necessary in most circumstances.

Providing the existing structure shows no signs of movement, cracking or any form of instability, a test dig is not always needed.

You will be asked to confirm that the base is fit for purpose and suitable for the project as part of your building regulation application.

If you do perform a trial dig you must ensure that any strip foundation is a minimum of 450mm deep with a minimum of 150mm of concrete.

IF IN DOUBT ABOUT STRUCTURAL COMPLIANCE. PLEASE CONSULT WITH A STRUCTURAL ENGINEER OR YOUR LOCAL BUILDING CONTROL OFFICER.

The installation of cavity trays above solid roof extensions is always regarded as 'best practice'.

ULTRAROOF SURVEYING GUIDELINES

Ultraroof, light weight solid roofing differs from Classic conservatory roofing in that, it offers a traditional overhanging soffit area beyond the external frame face. Initial site survey is no different in that great care must be taken in examining the existing host wall for being flat (ie: bulges or bowing from left to right) and vertically plumb (ie: leaning forwards or backwards). If any of the above issues are detected then this must be allowed for in your final sizes.

ULTRAROOF IS WORKED FROM INTERNAL FRAME SIZES.

If replacing a conservatory roof on **60mm frames** with **Standard soffit**, the soffit overhang **increases to 50mm**. If installing on **100mm frames**, the Standard soffit overhang would **reduce to 10mm**.

INTERNAL FRAMES	OVERHANG IS SET	WHEN BOX EAVES BEAM SAT ON
STANDARD SOFFIT	40mm	70mm frames
EXTENDED SOFFIT	151.5mm	70mm frames

ULTRAROOF INFORMATION

1 Ultraroof must be made square, off the host wall. Variable internal angles or uneven facet sizes maybe accommodated. Maximum 13° pitch variation (front to side)
2 Tudor roof maybe used over odd facet Victorian. See pages 11 and 78.
3 Lean-To's with hipped end(s) may have up to 13° pitch variation front to side(s). Minimum pitch 12.5°.
4 Every roof must be pitched in full degrees (e.g. not 25.5°), duo pitches range from 15°- 40° and Lean-To's start at 12.5°, otherwise 13-40 in one degree increments available in full degree increments.
5 On replacement roof only jobs existing internal frame angles may vary. This will result in varying internal/external soffit width variations being visible. If extreme, replacing the frames would be recommended. If existing basework/ brickwork angles are out, the fitting of a deeper external cill may hide discrepancies.
5 Externally, Ultraroof with "Standard soffit" is 180mm (90mm each side) wider than Classic roof. Greater care is needed when working close to the boundary line. Ultraroof, coincidentally, is the same width as Classic roof with Cornice .i.e: 242mm from internal frame to outer edge of gutter.
7 Externally, Ultraroof with "Standard soffit" sits 27.5mm higher on slope/pitch than Classic roof at 25° pitch. This should not affect an existing lead flashing line if going to be re-used.
8 Externally, Ultraroof overall roof height (stated on roof confirmation) is measured from underside of box eaves beam (head of frame, unless packed off) to top of external ridge top capping. Allow for standard ridge flashing detail above this.
9 Externally, if fitting "Extended soffit" the roof sits 79.5mm higher on slope/pitch than Classic at 25° pitch. This could interfere with existing flashing detail. Critically more important if a cavity tray is installed. Therefore, if cavity trays are installed, standard soffit overhang would be better suited.
10 Internally, using "Standard soffit" detail: The box eaves beam (when plastered) stands 321.5mm in from internal frame. ENSURE this does not cut across an internal patio door/window opening on the rear host wall. Using "Extended soffit" which stands only 210mm in from internal frame may help in this situation. Reducing the opening width and replacing with narrower doors may be an alternative solution. See page 30.

CHOOSING YOUR BEAM POSITION AND CALCULATING ROOF SIZE

If you are ordering hup!, you need to input the external base datum into Udesign to determine the right size of roof.

Frames on hup! dwarf walls

hup! with full height brickwork

hup! with combination of frames and full height walls.

40MM SOFFIT ON FRAMES ONLY

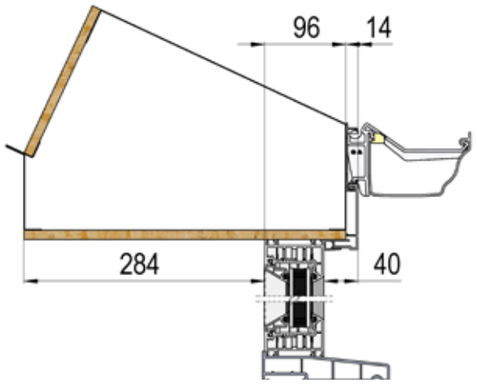

151.5MM SOFFIT ON FRAMES ONLY

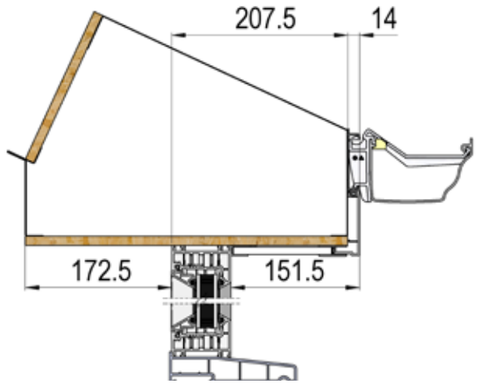

CHOOSING YOUR BEAM POSITION AND CALCULATING ROOF SIZE

BOX BEAM ON BRICK WORK

72.5MM SOFFIT FROM FRAME OR 40MM FROM BRICK WORK
Old brick option 4.

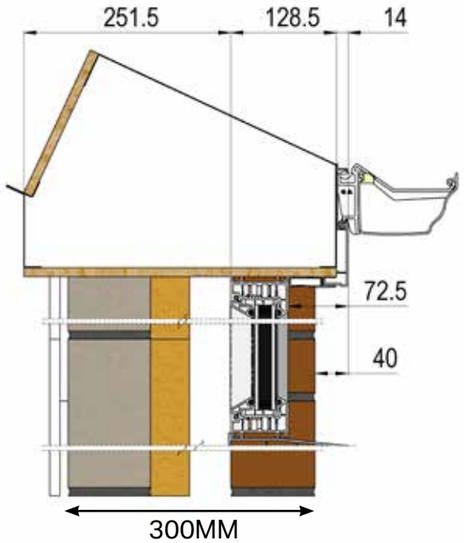

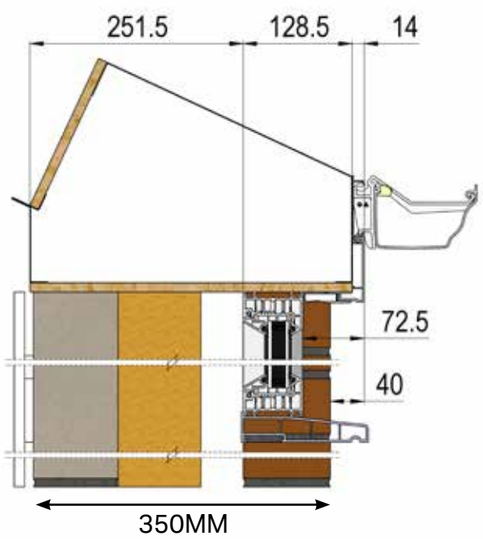

126.5MM SOFFIT FROM FRAME OR 94MM FROM BRICK WORK
Old brick option 1.

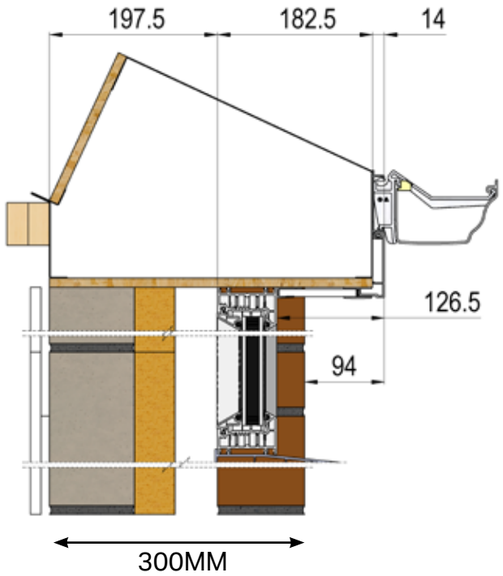

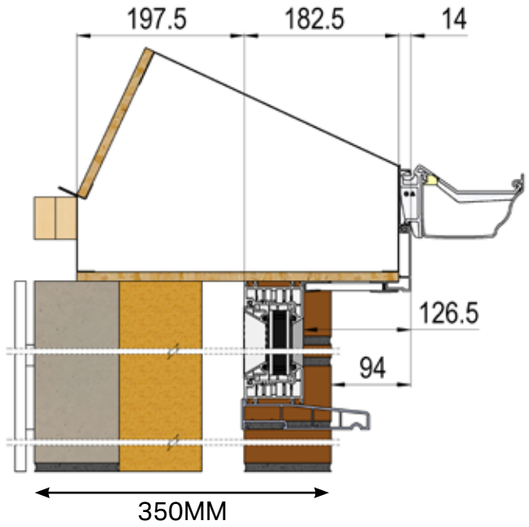

The dimensions of the soffit types above are all measured to the exterior edge of the window frame. Choose the right option for your particular project. All brick & block diagrams are shown with a 300mm or 350mm wall – internal dimensions will vary according to wall thickness.

Ordering
When you order Ultraroof, use internal frame dimension to specify your roof and choose one of the soffit options. If ordering with hup! you will give the base dimensions for your project and then choose the option you require from the hup! options above. The extended soffit options carry a price premium because the roofs is bigger.

CHOOSING YOUR BEAM POSITION AND CALCULATING ROOF SIZE

These are the options available when hup! touches the underside of the box beam. .

HUP! WITH 72.5MM SOFFIT FROM EXTERNAL FRAME

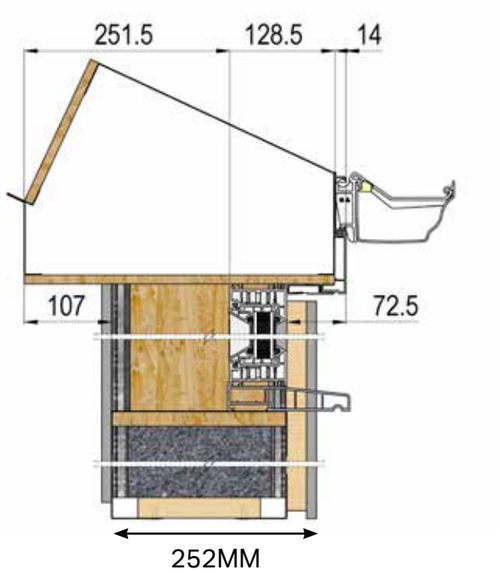

HUP! WITH 199MM SOFFIT FROM EXTERNAL FRAME

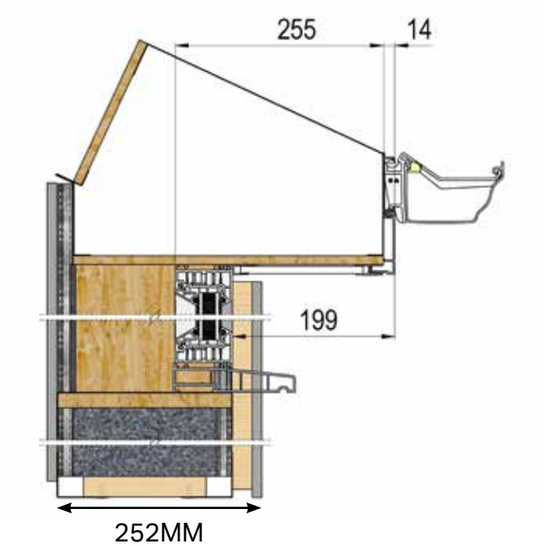

The following options are available when hup! doesn't touch the underside of the box beam and when you have dwarf walls.

HUP! ON FRAME WITH 40MM SOFFIT

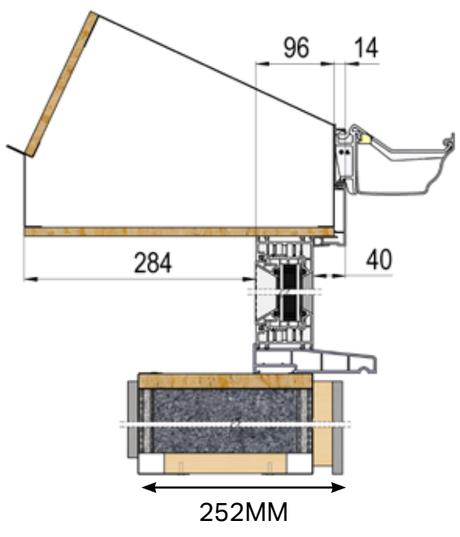

HUP! ON FRAME WITH 151.5MM SOFFIT

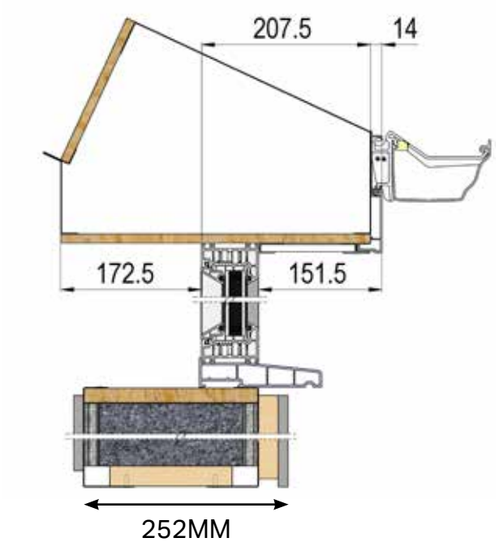

CHOOSING YOUR BEAM POSITION AND CALCULATING ROOF SIZE

The following options are available when hup! doesn't touch the underside of the box beam and when you have dwarf walls.

HUP! ON FRAME WITH 72.5MM SOFFIT

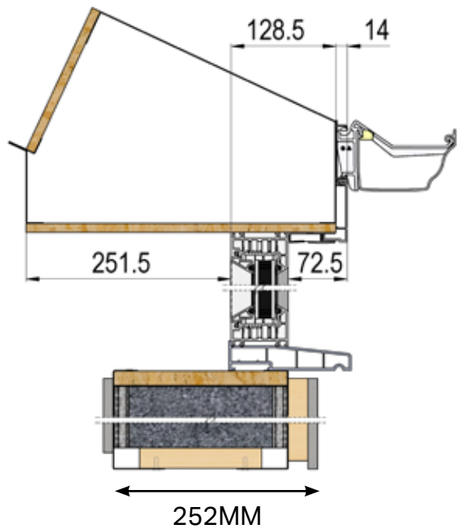

HUP! ON FRAME WITH 126.5MM SOFFIT

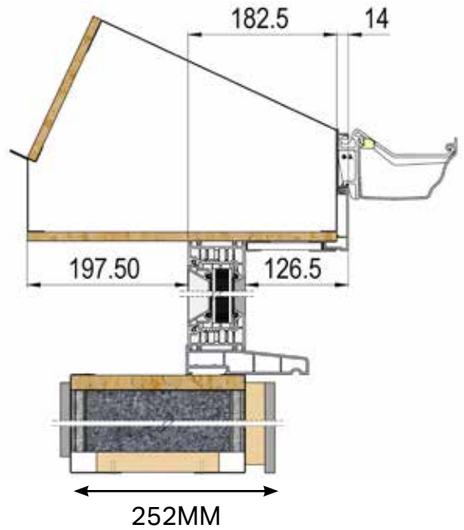

HUP! ON FRAME WITH 199MM SOFFIT

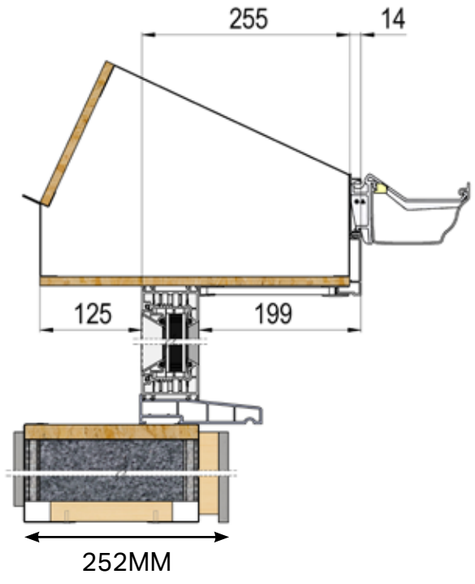

CHOOSING YOUR BEAM POSITION AND CALCULATING ROOF SIZE

-190MM SOFFIT FROM EXTERNAL FACE OF BRICK WALL

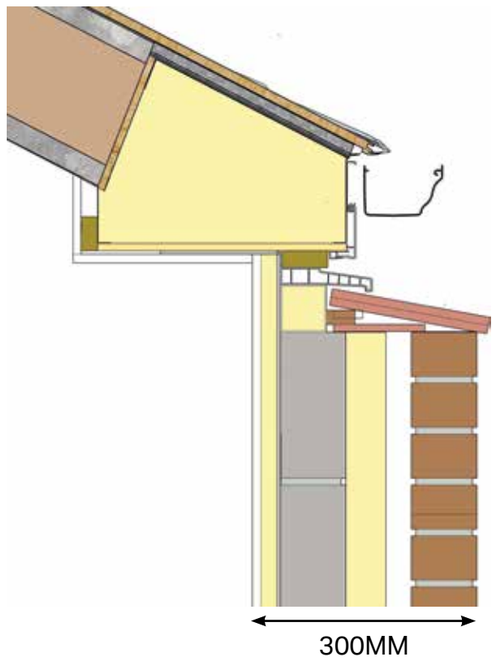

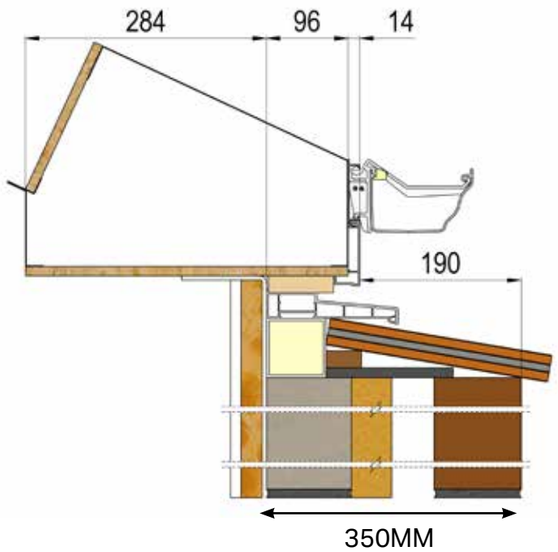

0MM SOFFIT / SAT ON 150MM CILL

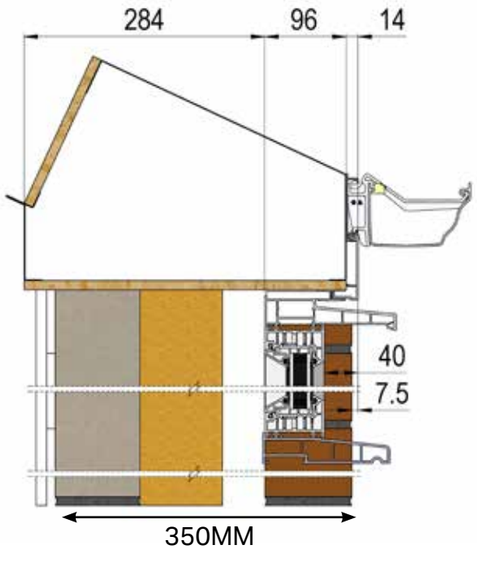

Notes

- Wall straps fixed to underside of the beam and 1m down face of blockwork at 2m centres.
- Fit 25mm insulated plasterboard PL4015 to wall to prevent thermal bridging.
- 12.5mm plasterboard on adhesive dabs to the remainder of the wall.
- Two rows of creasing slates with staggered joints bedded in mortar with slate slips as required.
- Continuous DPC run across the cavity closer, up the face of the corner post and taped to the top surface.
- 70mm PVCu corner post cladding filled with insulated.
- Weep holes at base of wall 1.2m centres.

ROOF HEIGHT CALCULATOR

40mm Soffit

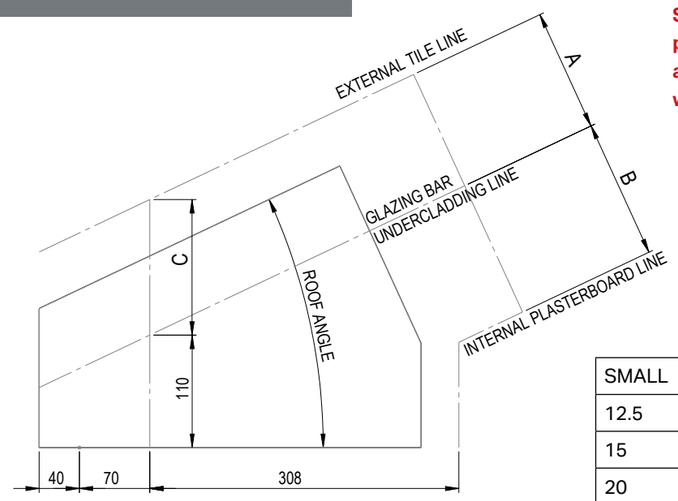

Sizes based on 15mm foiled back plasterboard. 12.5mm plasterboard is available to use however the heights will differ slightly.

SMALL	A	B	C
12.5	100	157	102
15	104	153	108
20	112	144	120
25	120	136	133
30	128	129	147
35	134	122	164
40	141	116	183

151.5mm Soffit

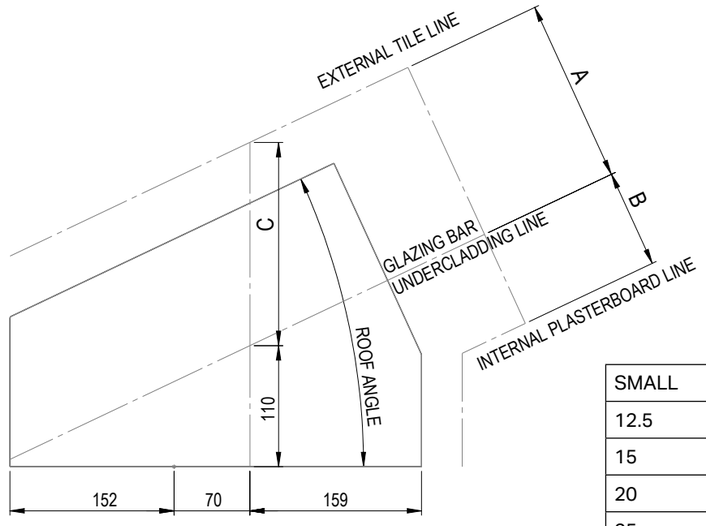

Sizes based on 15mm foiled back plasterboard. 12.5mm plasterboard is available to use however the heights will differ slightly.

SMALL	A	B	C
12.5	124	133	127
15	133	124	137
20	150	106	160
25	167	89	185
30	183	73	212
35	198	58	242
40	212	44	277

ROOF HEIGHT CALCULATOR

72.5mm Soffit

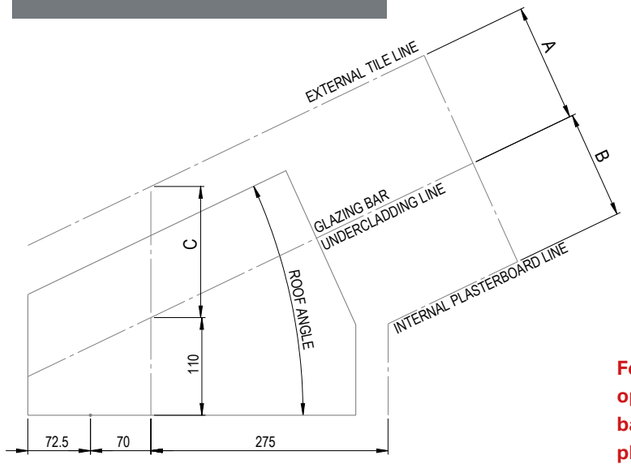

SMALL	A	B	C
12.5	107	150	109
15	112	144	116
20	123	133	131
25	134	123	148
30	144	113	166
35	153	104	187
40	161	95	211

For 72.5mm, 126.5mm and 199mm soffit options, sizes based on 15mm foiled back plasterboard. However 12.5mm plasterboard is available to use however the heights will differ slightly.

126.5mm Soffit

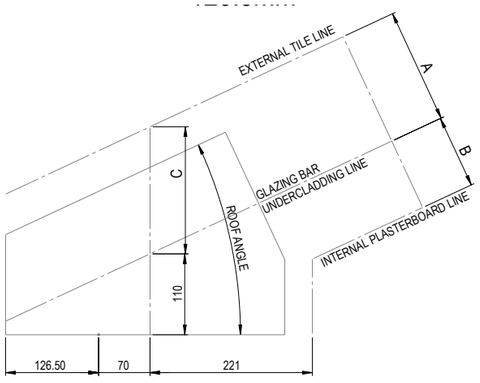

SMALL	A	B	C
12.5	118	138	121
15	126	130	131
20	142	115	151
25	157	100	173
30	171	86	197
35	184	73	225
40	196	60	256

199mm Soffit

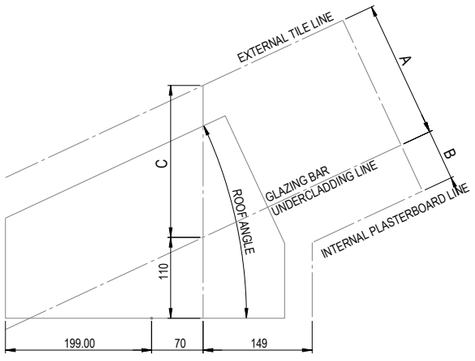

EXTENDED	A	B	C
12.5	134	122	137
15	145	111	150
20	167	90	177
25	187	69	207
30	207	49	239
35	226	31	275
40	243	14	317

SPECIFIERS
– USEFUL POINTS TO REMEMBER WHEN ORDERING ULTRAROOF

1. A Building Regulation application form must always be submitted to the relevant Local Authority or private sector building control.
2. Postcodes should always be included with your order so that the structural design guide within the software will ensure the snow and wind loads are correct.
3. With a standard soffit Ultraroof is 90mm wider than a standard Classic conservatory roof on both sides and 202mm wider when the extended soffit is used. Include all WALL heights and distances to boundary lines in floor plans and elevations.
4. Ultraroof's aluminium ridge and hips caps are generally preferred vs replica slate ridge caps as they are considered to look better and are fitted much faster. Both options are available, see page 14 for restrictions.
5. All new window frames and cills should be fully reinforced to support Ultraroof. A maximum frame length of 2.5m is allowed before structural couplings are required.
6. Ultraroof's unique full height glass panels are the most cost effective way to install glazed panels and are consumer preferred due to their size. There are however some limitations to the glazing options offered. See pages 33-36 and 38.
   - Rectangular glass units can NOT be positioned on roof slope down to tapered box gutter.
   - 550mm wide Velux roof windows only. Can be installed to tapered or 265mm box gutter.
   - Integrated glazing. Only rectangular glass units up to 980mm wide at 90° to the ridge are permitted.
7. The Ultraroof box beam requires structural support in certain situations e.g. over 4M spans and when a 265mm box gutter is used. The structural support options offer a design choice for homeowners. Ensure that the options have been agreed with the homeowner in advance. Refer to pages 43-54.
8. During the initial stages of installation the box beam will need to be supported. Ensure timber support props or acro props will be available on site, refer to installation guide.
9. There are two box gutter options; 265mm or tapered. Tapered box gutters can only be used when box beam or roof panels directly abut host wall. Refer to pages 9 and 37-38.
10. Ultraroof comes in three shades of authentic slates and you can order a range of colours for fascia board, barge board, gable infil & guttering etc. See pages 15-17 for options.
11. On Lean-to roofs, the gable end frame stiffener is NOT supplied as standard. Frame stiffener can only be used upto 1250mm span on doors Must be requested if required (for example above door openings (see image at the bottom of page 32)

Several items are not supplied as they are easier and cheaper to source locally.
These are:-

- Velux roof windows and EDL flashing kits (the roof arrives prepared for Velux)
- Anchor or Masonry fixng bolts to host wall
- Internal 25mm x 50mm, 20mm x 50mm timber plastering battens.
- 12.5 foiled backed plaster board and skimming beads.
- LED (fire resistant) lighting.
- Structural support (available to order)
- Timber support props (75mm x 50mm) beam support
- FRAME TO BOXBEAM FIXINGS

Always consult us, if there is something you are uncertain about, please call technical helpline on 01200 452918

LEAN TO INFORMATION - HEIGHTS TO TOP OF HALF RIDGE TOP CAPPING

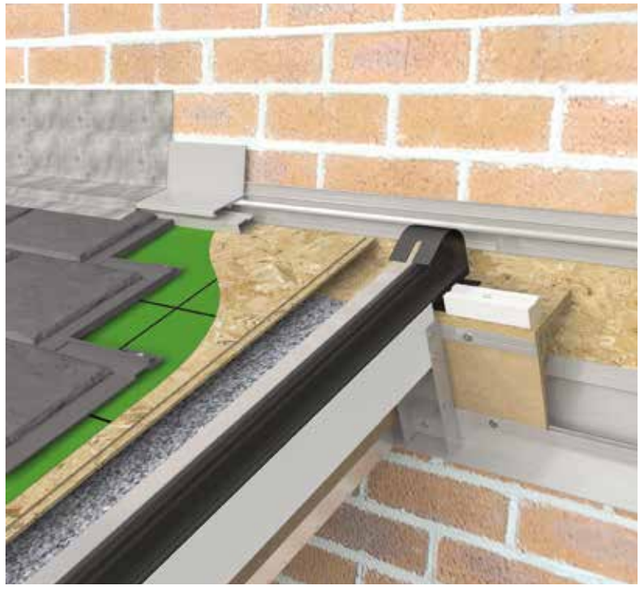

Half ridge glass lean to

EXAMINING THE HOST WALL

This information applies to both replacement and new build projects.
Please read this guide before commencing your survey.

Check the House Wall
The box beam is large and should not be cut on site. Slates are 2 on a panel, these are NOT, this is to allow for size variations.
Please check the house wall to establish whether it is plumb. Adjusting the projection dimension before manufacture will ensure your design will fit. Please advise your installers that you have made this adjustment to avoid confusion on site.

New Build.
If the house wall leans forward: when the Ultraroof half ridge (shown) butts to the house wall the whole conservatory will be pushed forward of the basework, resulting in excessive overhang at the front. You would benefit by reducing the projection in this case to. See Diagram A.

If the house wall leans backwards: then the roof projection dimension should be taken from the top of the dwarf wall and a suitable packer will need to be inserted between the half ridge and house wall when installing. See diagram B.

Diagram A Diagram B

BOX BEAM SOFFIT DETAILS

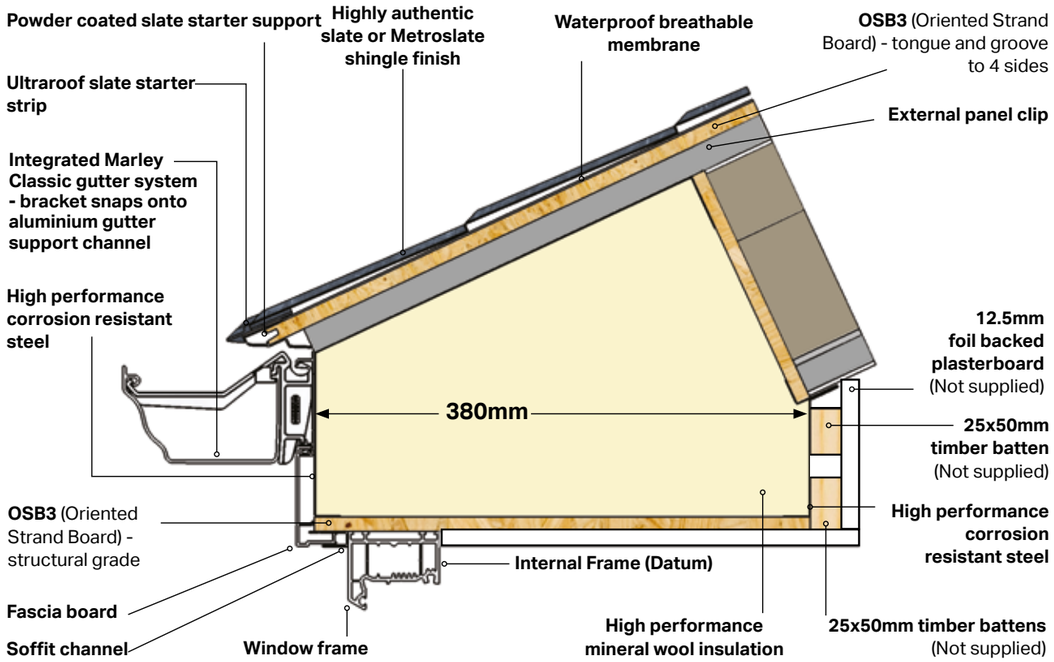

40mm Standard Soffit
NOT SUITABLE FOR SUPER-INSULATED COLUMNS

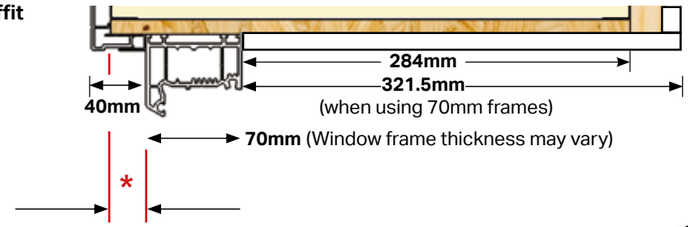

* Outer face of box beam overhang set 26mm from outer face of 70mm frame

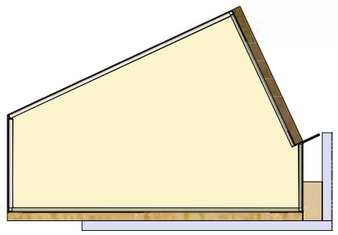

151.5mmm Extended Soffit **Alternative** (only option if sat on super-insulated columns) - see page 77.
MUST BE USED ABOVE SUPER-INSULATED COLUMNS

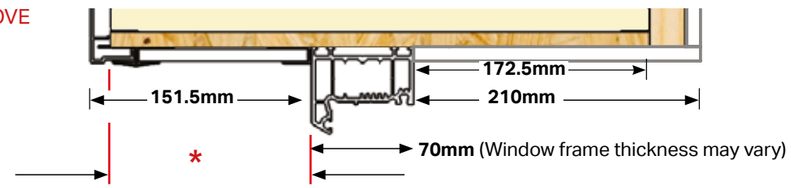

* Outer face of box beam overhang set 137.5mm from outer face of 70mm frame

PRODUCT ASSEMBLIES

Beam glass

Beam solid

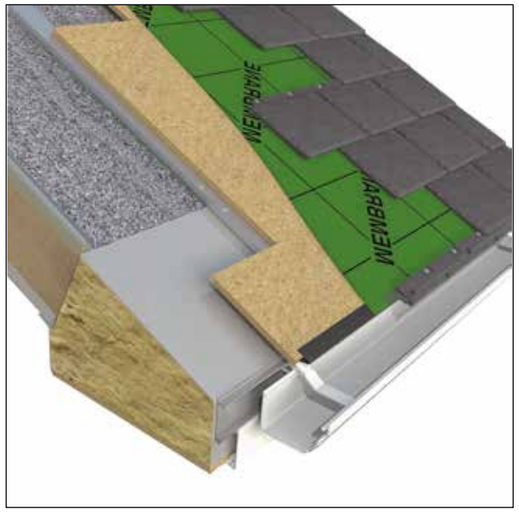

Ridge solid to glass

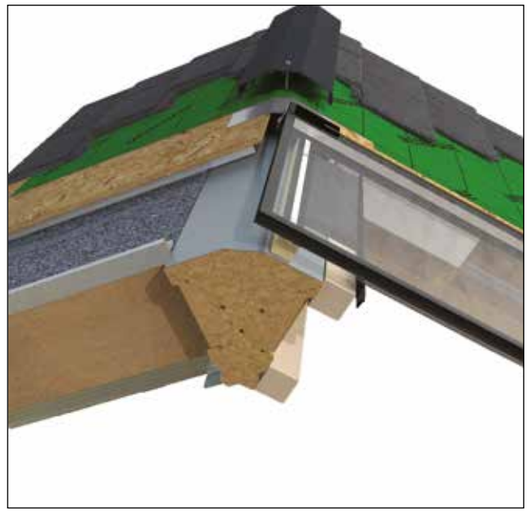

Ridge solid to solid

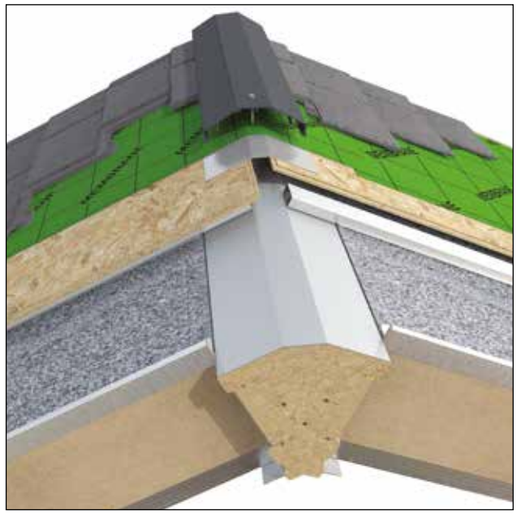

Ridge glass to glass

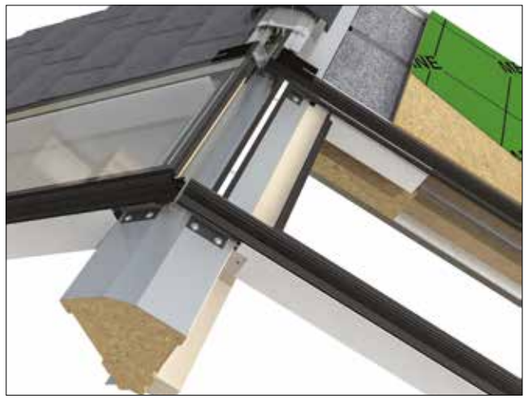

265mm box gutter solid

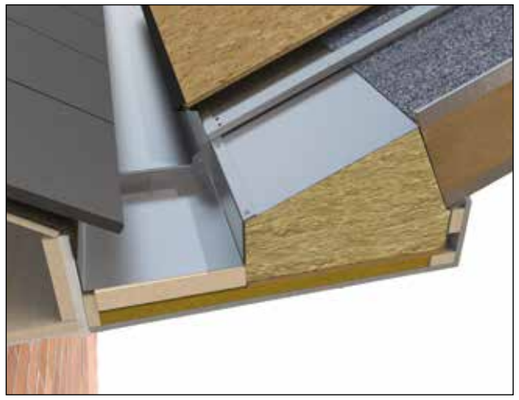

PRODUCT ASSEMBLIES

265mm box gutter glass

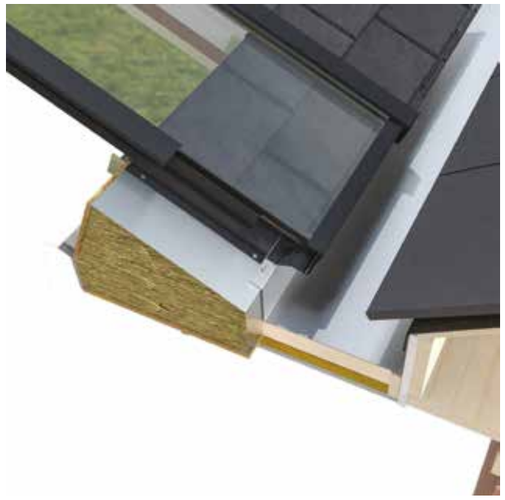

Tapered box gutter

Wallplate glass

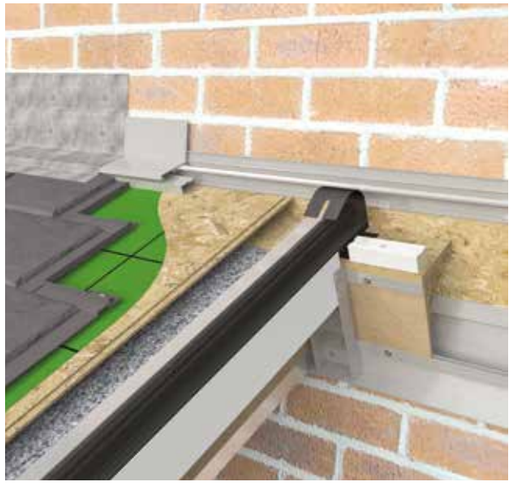

Wallplate solid

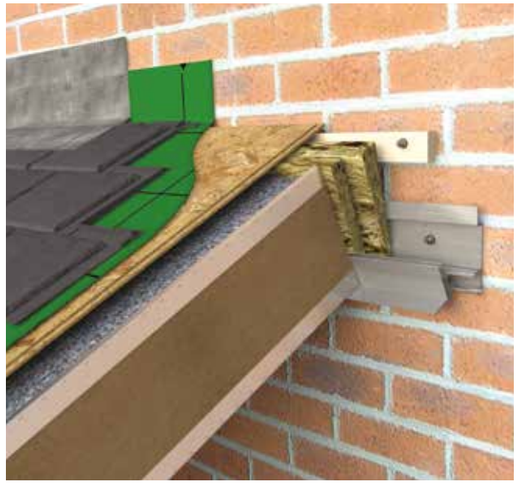

Bars

Gable extended

Lean to roof gable end frame stiffener is **NOT** supplied as standard. Frame stiffener can only be used upto 1250mm span on doors.

Must be requested if required (for example above door openings). Please refer to guides for fitting bi-folds to gable ended or gable ends on lean-to roofs.

Lean to only

Lean to gable stiffener

FIRE SAFETY

The minimum fire performance rating required by Building Regulations for roofs is AC based on the following classifications.

FIRST LETTER
PENETRATION CLASSIFICATIONS

A Specimens not penetrated within 1 hour
B Specimens penetrated in not less than half hour
C Specimens penetrated in less than half hour
D Specimens penetrated in the preliminary flame test

SECOND LETTER
SPREAD OF FLAME CLASSIFICATIONS

A Specimens with no spread of flame
B Specimens with not more than 533mm spread of flame
C Specimens with more than 533mm spread of flame
D Specimens which continue to burn for 5 mins after the withdrawal of the test flame or spread more than 381mm in the preliminary test.

The assembled Ultraroof has been independently fire tested by Exova Warrington Fire and has been rated AC

Certificates available to download https://trade.ultraframe-conservatories.co.uk/trade/media/
The full report is available on request from Ultraframe.

ROOF GLAZING

Select from INTEGRATED ROOF PANELS or VELUX ROOF WINDOWS (see seperate guide for Velux).

NOTE: If the roof design incorporates a box gutter, the box gutter type chosen will dictate your glazing option. (See options and instances on p37-38).

INTEGRATED GLAZED PANEL POSITIONING

GLAZING AREA
HOST WALL / STRUCTURE

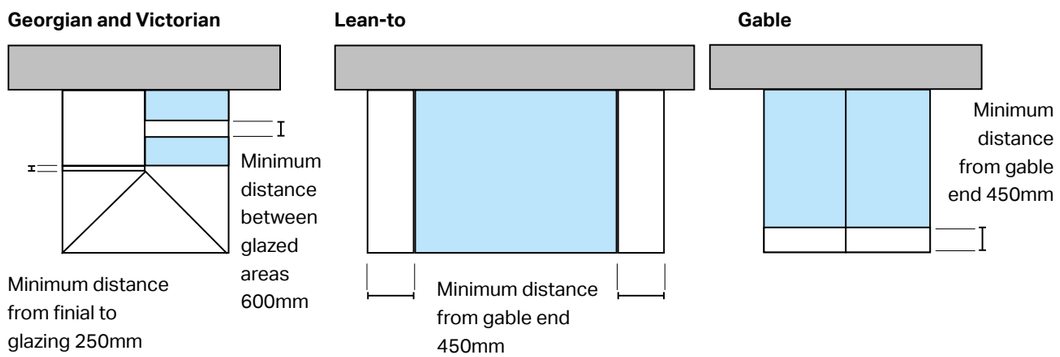

Glazing can be fitted immediately adjacent to the host wall or MUST be at least 364mm away from the host wall.

Glazing area - bars must be a minimum of 300mm centres
- are spaced at a max 1000mm centres
- multiple glass panels in series is possible. e.g. 1800mm glazed area in 3x 600mm or 2 x 900mm.

INTEGRATED GLAZING RULES

WHEN CAN YOU HAVE GLAZING?

GLAZING PANEL
MAX 980mm
(Bar centres 1000mm)
up to an area of 2.4m²

One of Ultraroof's features is the ability to have fully glazed panels that span right from the ridge to the edge of the roof, allowing great amounts of light to enter a room. These glass panels can be arranged in all manner of ways and configurations to give the desired result for design of the roof. The following outlines the options for glazing in the different styles Ultraroof.

Solid panels at host wall.
Glass panels adjacent.

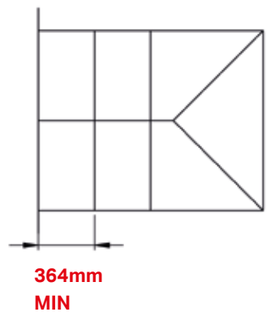

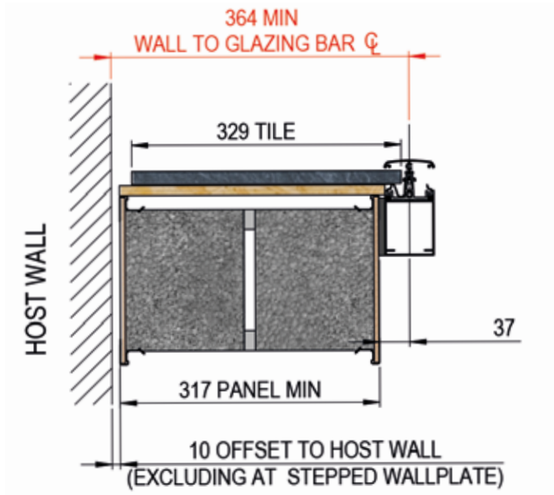

Glass panels at host wall.
Glass panels adjacent.

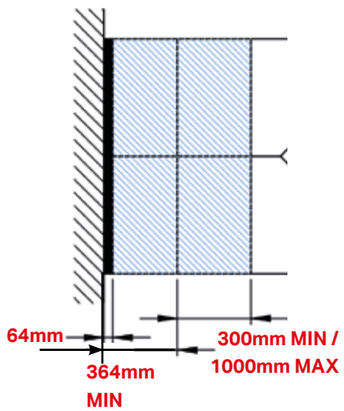

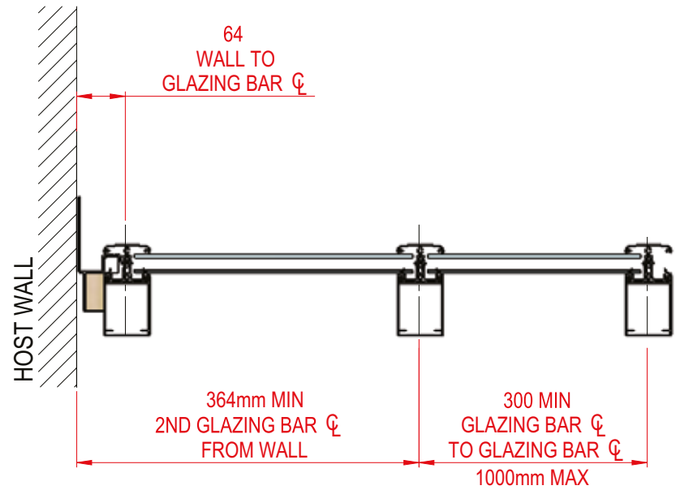

INTEGRATED GLAZING RULES

Glass from finial point

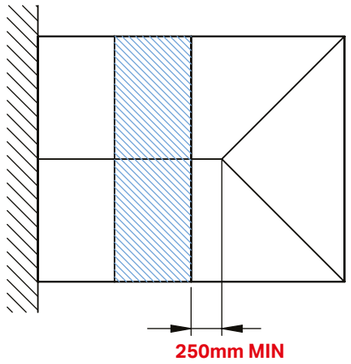

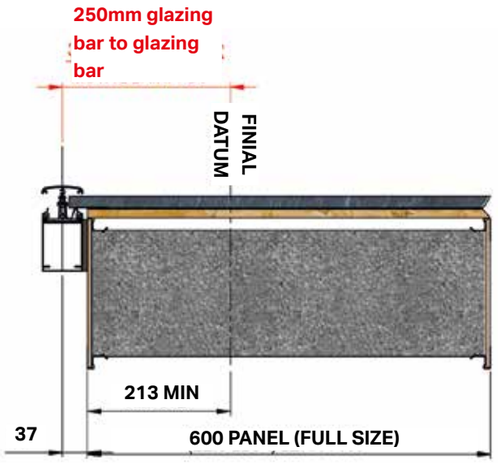

Solid panel between glass panels

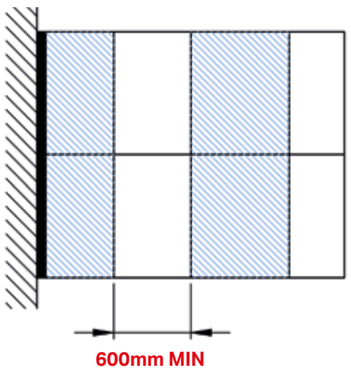

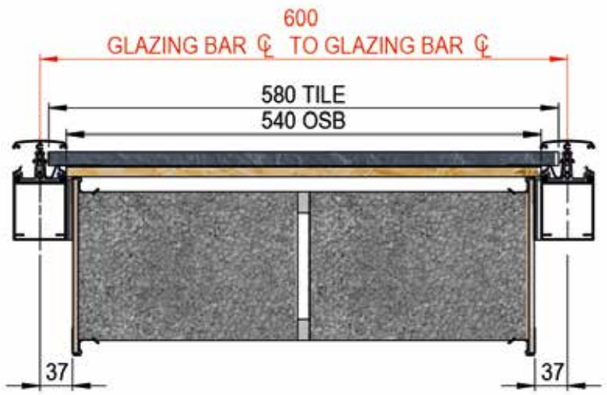

INTEGRATED GLAZING RULES

INTERNAL FRAME LINE

GLAZING PANEL MAX 980mm
(Bar centres 1000mm)

Glass from gable end and lean to gable ends

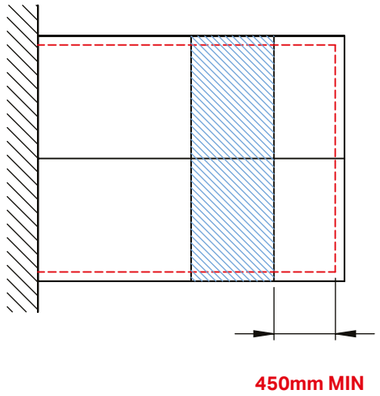

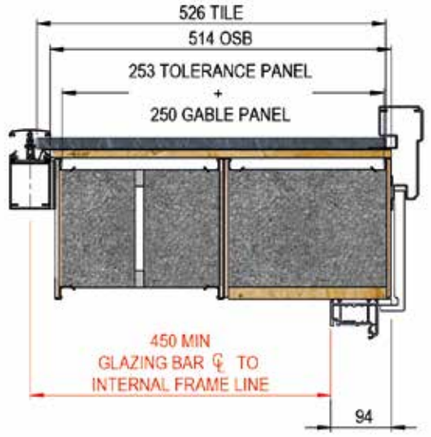

Gable roof with standard soffit

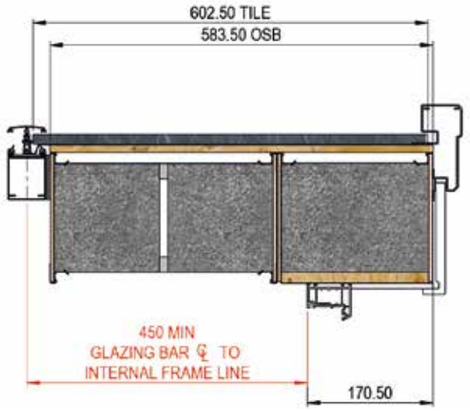

Gable roof with extended soffit

VALLEY TO GLAZING BAR CENTRE

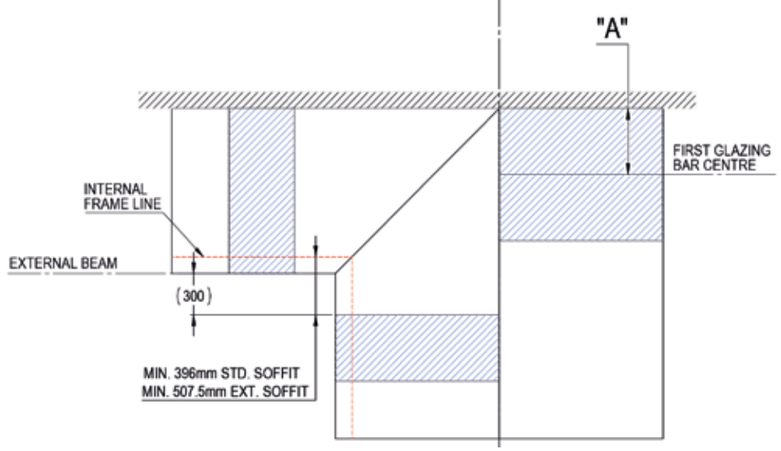

GLASS ON FULL RIDGE OPPOSITE VALLEY

"A" = MINIMUM DISTANCE FROM HOST WALL TO FIRST GLAZING BAR CENTRE (ALSO COVERS MIN. WIDTH OF GLASS AGAINST HOST WALL, IF SPECIFIED)

IF PITCHES ARE EQUAL, OR IF PITCH OF LEAN-TO IS GREATER THAN THAT OF THE FULL-RIDGE, THEN "A" = 450mm

IF PITCH OF THE FULL-RIDGE IS GREATER THAN THAT OF THE LEAN-TO THEN SEE BELOW TABLE, BY PITCH DIFFERENTIAL -

PITCH DIFFERENTIAL	DIMENSION "A" MINIMUM
0-4.9	450
5-9.9	500
10-14.9	650
15-19.9	800
20-24.9	900
25 AND ABOVE	1100

CHOOSING APPROPRIATE BOX GUTTER AND SUPPORT

Some box gutters may need internal beam support (see page 38). If the customer wishes to change the box gutter type to avoid internal support, this may restrict the placement of the glass. On some roofs there may be a trade off between internal support and glass placement. Please read pages 43-54 and discuss this with the customer.

Use these pages to ensure you have a combination that works.
When replacing roofs with a box gutter see pages 82-86.

STANDARD BOX GUTTER

Up to 3200mm internal frame to internal frame. One additional support required located centrally (Gallows/brickwork pier). If doors or windows present support required on each side. Standard boxbeam needs structural support. When the box gutter exceeds 4m and additional support is required. See pages 43-54.

A

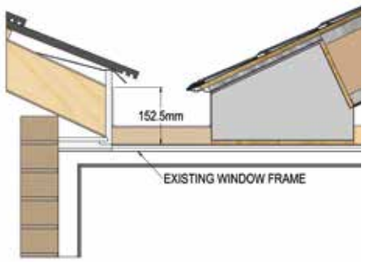

STANDARD TAPERED BOX GUTTER

When a tapered box gutter is used the box beam is always supported by a wall mounted angle bracket that runs along the length of the beam. This instance does not require structural support.

B

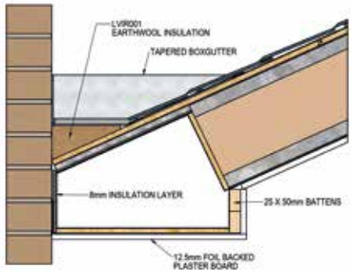

BOX BEAM ON WINDOW FRAME

The box beam is always supported by the window frame that runs along the length of the beam. This instance does not require structural support. The beam requires support every 4m. In addition to the frames. This support may come from either a frame coupler or corner post.

C

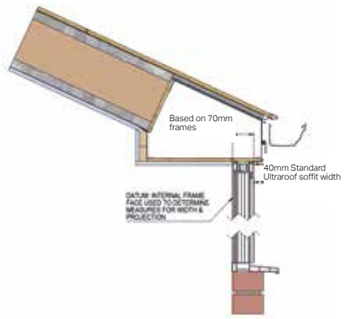

BOX BEAM ON BRICK WORK

The box beam is always supported by the brick work that runs along the length of the beam or window frames in openings in the brickwork. This instance does not require structural support.

D

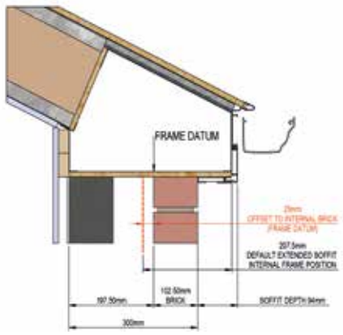

CHOOSING APPROPRIATE BOX GUTTER AND SUPPORT

	Requires additional structural support (see options)	GLAZING top to bottom from ridge to box beam	VELUX dependent on roof size	Corner condition LEFT mirrored for right
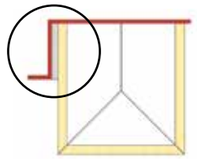	**NO**	**YES**	**YES**	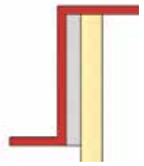 **A**
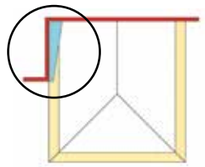	**NO**	**NO**	**YES**	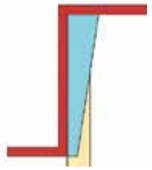 **B**
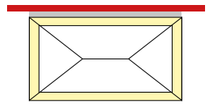	**YES**	**YES**	**YES**	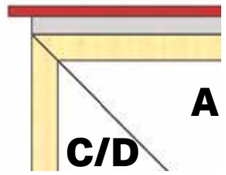 **A** **C/D**
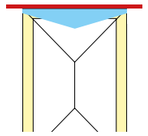	**NO**	**B = NO** **C/D = YES**	**YES**	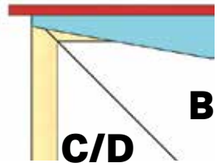 **B** **C/D**
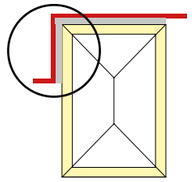	**YES**	**A = YES** **(off ridge side only)**	**YES**	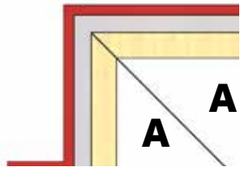 **A** **A**
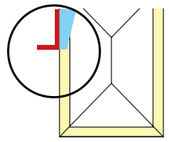	**NO**	**NO**	**YES**	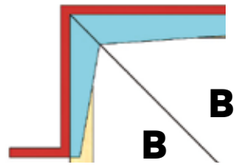 **B** **B**
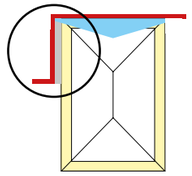	**YES**	**A = YES** **B = NO**	**YES**	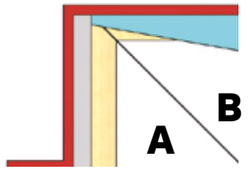 **B** **A**

Host Wall Box Beam 265 box gutter Tapered box gutter

MAXIMUM ROOF SIZES AND STRUCTURAL PERFORMANCE

All sizes relate to the internal window frame consistent with conservatory standard set out. The maximum unsupported beam span is 4m. Bi-folding doors MUST be bottom supported and not top hung.

The jointing of box beams (see p71-72) allow for larger/wider roofs providing appropriate structural support is in place. Always check with technical team for guidance.

Victorian/Gable/Georgian/Edwardian

	Pitch 15° - 21°		Pitch 22° - 29°		Pitch 30° - 40°	
	Width (mm)	Projection (mm)	Width (mm)	Projection (mm)	Width (mm)	Projection (mm)
Max Size	6500	5000	6700	5000	6500	5000
At Loadings	Wind 1.35kN	Snow 0.7kN	Wind 1.5kN	Snow 0.89kN	Wind 1.65kN	Snow 0.8kN

Min ridge length = 200mm

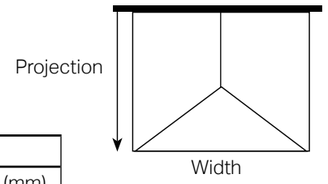

Lean-to

	Pitch 12.5° - 29°		Pitch 30° - 40°	
	Width (mm)	Projection (mm)	Width (mm)	Projection (mm)
Max Size	6780	4500	6780	4000
At Loadings	Wind 1.4kN	Snow 0.75kN	Wind 1.15kN	Snow 0.75kN

Min half ridge length = 200mm

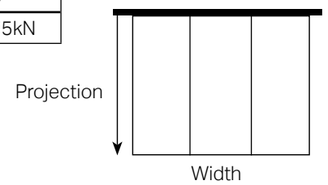

Hipped Lean-to

	Pitch 12.5° - 29°		Pitch 29° - 40°	
	Width (mm)	Projection (mm)	Width (mm)	Projection (mm)
Max Size	6780	3500	6780	3200
At Loadings	Wind 1.4kN	Snow 1.1kN	Wind 1.3kN	Snow 0.6kN

Min half ridge length on a single hip = 200mm
Min half ridge length on a double hip = 200mm

Double Hipped Georgian

	Pitch 15° - 29°		Pitch 30° - 40°	
	Hip Width (mm)	Projection Length (mm)	Width (mm)	Projection (mm)
Max Size	5600	No limits	4300	No limits
At Loadings	Wind 1.35kN	Snow 0.7kN	Wind 1.5kN	Snow 0.89kN

Min ridge length on a double hip = 400mm

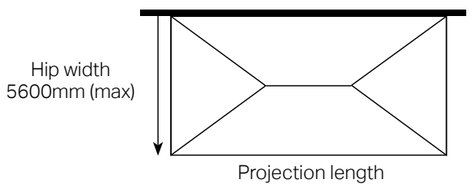

USING THIS GUIDE TO DECIDE ON STRUCTURAL LOADS - WORKED EXAMPLE

The only accurate way to specify Ultraroof is using U-Design software.
Either use a licensed copy of the software or send a sketch or one of its approved trade intermediaries / distributers, where the information will be input on your behalf.

Worked Example

A 4m x 4m* Georgian conservatory at 25 degree is being re-roofed at the rear of a semi-detached property in the small market town of Clitheroe. The homeowner wants to know if they can have Velux roof windows and what size and how many.

Turn to page 39, the correct page for the style of extension (in this case Georgian) and use the chart that shows the pitch range (defined as 25° for this project). As the project is defined as 4m x 4m, look up the loading for this size which shows Ultraroof can accept a load of 1.5kN/m2 from wind and 0.89kN/m2 from snow.

Now check how high above sea level the location is (Google search or try www.maps-streetview.com) – in this case it's 76m elevation above the sea level. As outlined in the worked example in red above, the location is in a small town (not the country).

Use figure 1, page 42 to check the wind speed at the location (in this case its 23 m/s which translates on table 1 to 0.68 kN/m²). From figure 2, page 42 check the snow load at the location (which is 0.6kN/m²).

Both figures at the actual site are within the design parameters of the Ultraroof system, so it is OK to proceed with the project with no amendments.

And finally, to determine the number and size of Velux roof windows that can fit into this extension, refer to seperate Velux guide for front elevation and side elevation to look up the vent opening sizes that can be configured into each elevation.

	Loads at postcode (kN/m²)	Max System Load (kN/m²)	System load MUST EQUAL or EXCEED post code load
SNOW	0.60	0.89	✔
WIND	0.68	1.5	✔

If you are unable to achieve the desired size for your Ultraroof project please contact Technical Support Team for advice on 01200 452 918

STRUCTURAL SPECIFICATION GUIDELINES

The size limitation for Ultraroof is limited by the projects geographic location.
The location of each project will determine the imposed loads on the finished structure (both wind and snow loadings will have an impact). The size of these loads can be obtained from U-design software as the roof is being specified. U-design uses historic weather datafiles which from a postcode can provide both wind and snow loadings. If you do not have access to U-design the maps will help ***guide*** you to the approximate loadings. This will not give you exact values but ones likely to be the worst case for your location.

If you are unable to achieve the desired size for your Ultraroof project please contact Technical Support Team for advice on 01200 452918.

The Map in figure 1 (overleaf) shows the fundamental basic wind velocity map in vb m/s. Find your approximate location and determine wind speed.
Now you need the height above sea level in metres - this information could be obtained via Ordnance Survey or Google Maps. Decide if your site is town or country.

Now use Table 1 Below to establish the load in kN/m2 and finally, check with figure 2 to see the snow load.

Table 1 Max wind Load EC1-4-NA - q(p) kN/m2

	Altitude	21.5	22	22.5	23	23.5	24	24.5	25	25.5	26	26.5	27	27.5	28	28.5	29	29.5
TOWN	50	0.55	0.57	0.60	0.62	0.65	0.68	0.71	0.74	0.77	0.80	0.83	0.86	0.89	0.92	0.96	0.99	1.03
	100	0.60	0.63	0.66	0.68	0.72	0.75	0.78	0.81	0.84	0.88	0.91	0.94	0.98	1.02	1.05	1.09	1.13
	150	0.65	0.68	0.72	0.75	0.78	0.82	0.85	0.88	0.92	0.96	0.99	1.03	1.07	1.11	1.15	1.19	1.23
	200	0.71	0.75	0.78	0.82	0.85	0.89	0.92	0.96	1.00	1.04	1.08	1.12	1.17	1.21	1.25	1.30	1.34
	250	0.77	0.81	0.85	0.88	0.92	0.96	1.00	1.04	1.09	1.13	1.17	1.22	1.26	1.31	1.36	1.41	1.46
	300	0.84	0.88	0.92	0.96	1.00	1.04	1.09	1.13	1.18	1.22	1.27	1.32	1.37	1.42	1.47	1.52	1.57
COUNTRY	50	0.63	0.66	0.69	0.72	0.75	0.78	0.81	0.85	0.88	0.92	0.95	0.99	1.03	1.06	1.10	1.14	1.18
	100	0.69	0.72	0.75	0.79	0.82	0.86	0.89	0.93	0.97	1.01	1.05	1.08	1.13	1.17	1.21	1.25	1.30
	150	0.75	0.79	0.82	0.86	0.90	0.94	0.98	1.02	1.06	1.10	1.14	1.19	1.23	1.28	1.32	1.37	1.42
	200	0.82	0.86	0.90	0.94	0.98	1.02	1.06	1.11	1.15	1.20	1.24	1.29	1.34	1.39	1.44	1.49	1.54
	250	0.89	0.93	0.97	1.02	1.06	1.11	1.15	1.20	1.25	1.30	1.35	1.40	1.45	1.51	1.56	1.62	1.67
	300	0.96	1.01	1.05	1.10	1.15	1.20	1.25	1.30	1.35	1.41	1.46	1.52	1.57	1.63	1.69	1.75	1.81

STRUCTURAL SPECIFICATION GUIDELINES

Figure 1
Fundamental basic wind velocity, vb,map in m/s

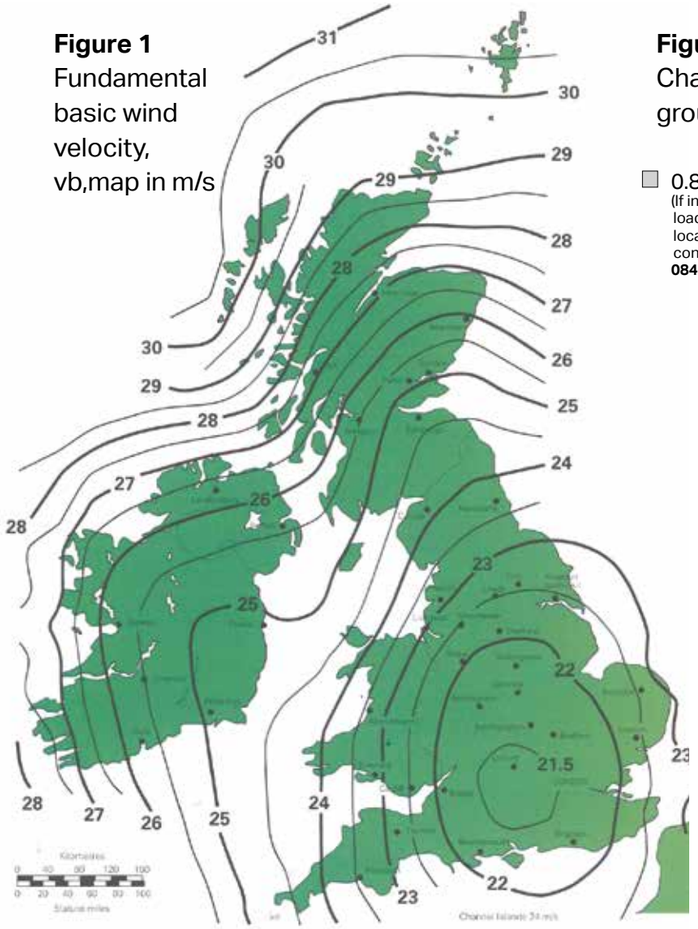

Figure 2
Characteristic ground snow load

0.8 AREA.
(If in doubt about loadings at your location, please contact us on **0843 208 6930**

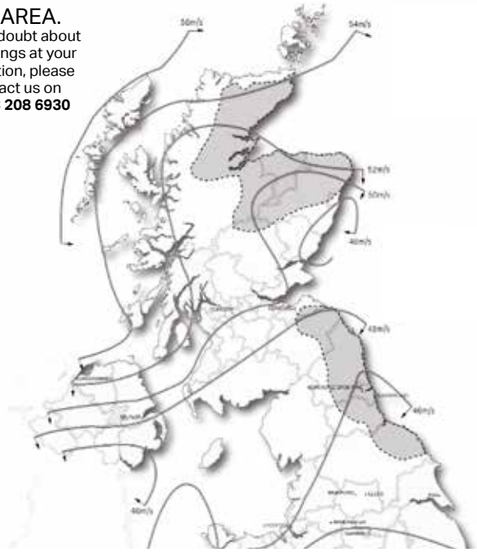

* SOURCE: Euro Codes

↓

Remainder of UK = 0.6

IMPORTANT - NOTE 1

The installer is responsible for ensuring that where Ultraroof is supported by means such as timber frame walls, the structure provides enough lateral support and resistance to wind uplift. Further guidance can be obtained through this guides technical documentation. We cannot be responsible for the structural adequacy of any existing building work used as part of an overall conversion. While assistance is provided, ultimate responsibility to secure Building Regulations lies with the retail installer.

IF IN DOUBT ABOUT STRUCTURAL COMPLIANCE, PLEASE CONSULT Stroma OR A STRUCTURAL ENGINEER

IMPORTANT - NOTE 2

This guide is intended to provide indicative information and to help you understand the design principles and applicable loadings. U-Design is the final arbiter on price and specification decisions.

IMPORTANT - NOTE 3

The Ultraroof components have been designed and manufactured to meet the specification of each individual job. Any significant on site modifications particularly relating to the repositioning of any structural members will invalidate the product's warranty and compromise the structure's integrity. If adjustments are required due to site conditions please consult us.

STRUCTURAL SUPPORT & WHEN IT IS REQUIRED

Structural support is a vital consideration when designing the Ultraroof. This document highlights the many variations and options available when adding structural support and crucially determining when and how it should be used. Support is needed in order to create roofs of various sizes, allow for various obstacles/intrusions and to fit into its designed space effectively.

If there is nothing in this document that relates to your situation then please contact our team and we can assist in working out a solution. Alteratively, contact a qualified structural engineer.

Ultraroof has a series of styles and shapes that have to be supported by the box beam which in turn must be supported by window frames or connections to the host wall. When a beam is in a position where it can no longer support itself, extra structural support is needed.

The instances where beams need structural support are as follows:

BEAM SUPPORT

A beam must be supported at both ends either by frames or masonry. The maximum unsupported span of a beam is 4m. See pages 44-54 for various support methods.

A BOX BEAM DOES NOT CONTACT THE HOST WALL

When a beam is not supported by the host wall via a bracket of any kind, then the beam needs additional structural support.

In this example, the box beam does not interact with the host wall and needs structural support from below.

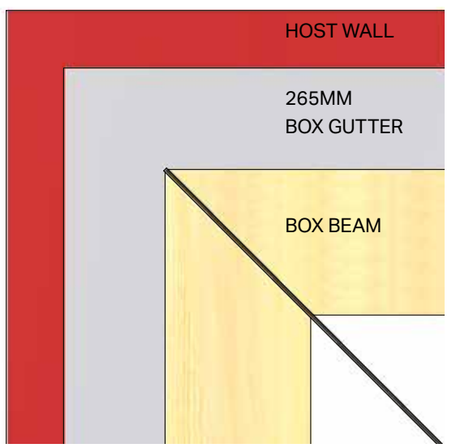

UNSUPPORTED SPANS

Adjusting Door Frame Heights

Ultraroof is capable of unsupported spans up to 4m in width. There is a slight natural deflection in the beam. The height of sliding or bi-fold doors that are positioned under the unsupported span should be smaller in height than the supporting structure. This will ensure the roof eaves beam does not cause the head of the door frame to bend and prevent the door from operating correctly. The height of the doors should be 15mm smaller than the masonry or frames supporting the roof. This will accommodate the worst case scenario for the deflection of the beam. You may wish to add another 10mm deduction in height to account for building tolerances and frame manufacture. Fixed glazing in sliding doors does not offer structural support, posts aligned with mullions should be used to support the roof if sliding doors exceed 4m in width (see next page).

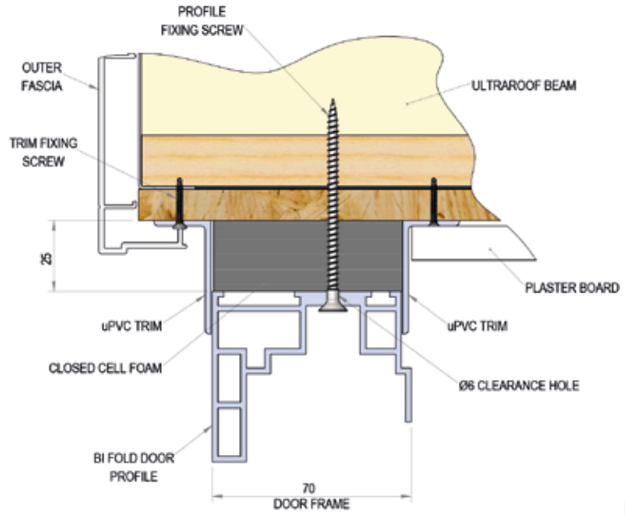

Final fixing to the head of the door should be completed after building the roof, fixing the head of the frame to the roof underside of the box beam. You should ensure the roof box beam is not causing deflection in the door frame. An L shaped trim can be fixed to the underside of the roof box beam to allow slight movement whilst cloaking the gap between the roof box beam and the head of the door frame, see above.

Support of the Roof on Ribbon Windows

Corner posts should include reinforcing and structural couplers placed between frame runs that exceed 2.5m. All PVCu cills reinforced. Where existing frames are retained internal structural posts should be used to provide vertical support within 2.5m from corner posts (see next page).

Support of the roof on brickwork or super insulated columns

Masonry returns should have a minimum width of 3.5 bricks adjacent to unsupported spans, approximately 777mm in width. NOTE: for smaller brickwork returns, a 100mm square wind post may be used (see page 46).

Full height frames or frames supported on walls must include either a structural frame coupler or a reinforced corner post connecting the window frame to the door under the unsupported span (see next page).

Please ensure the roof is adequately propped during construction to eliminate twist or unnecessary deflection to the roof box beam. See the installation guide for more details on propping.

UNSUPPORTED SPANS

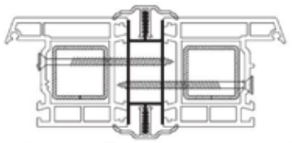

Frame Coupler Adjacent to Unsupported Spans

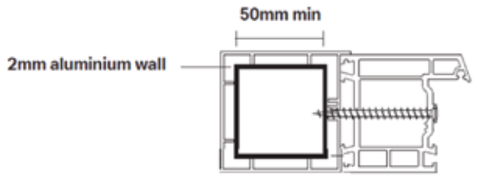

Corner Post Frames Adjacent to Unsupported Spans

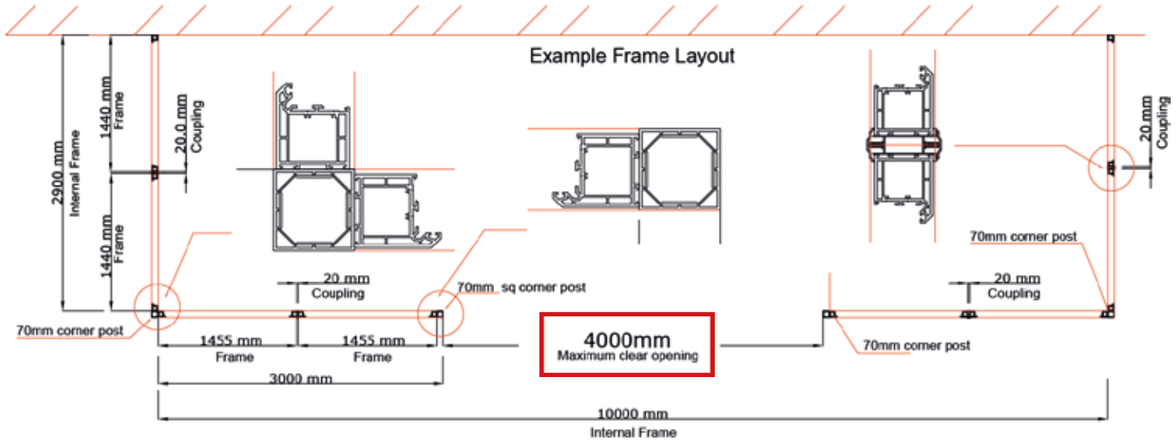

UNSUPPORTED SPANS

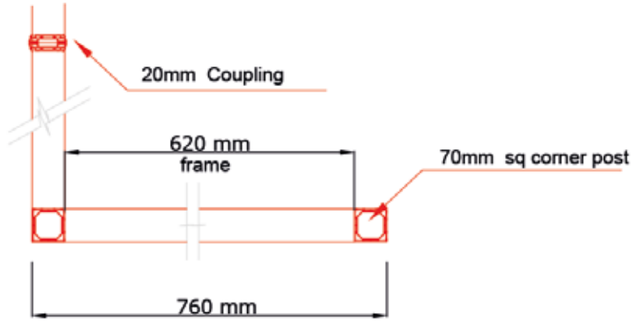

Minimum Frame Return Detail
(When adjacent/in line with 4m unsupported span)

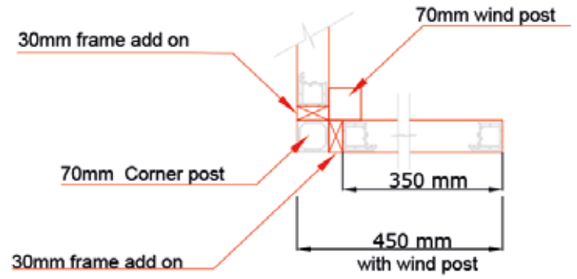

Minimum Frame Return Detail
with wind post
(When adjacent/in line with 4m unsupported span)

If no frame return, a structural goalpost must be used.

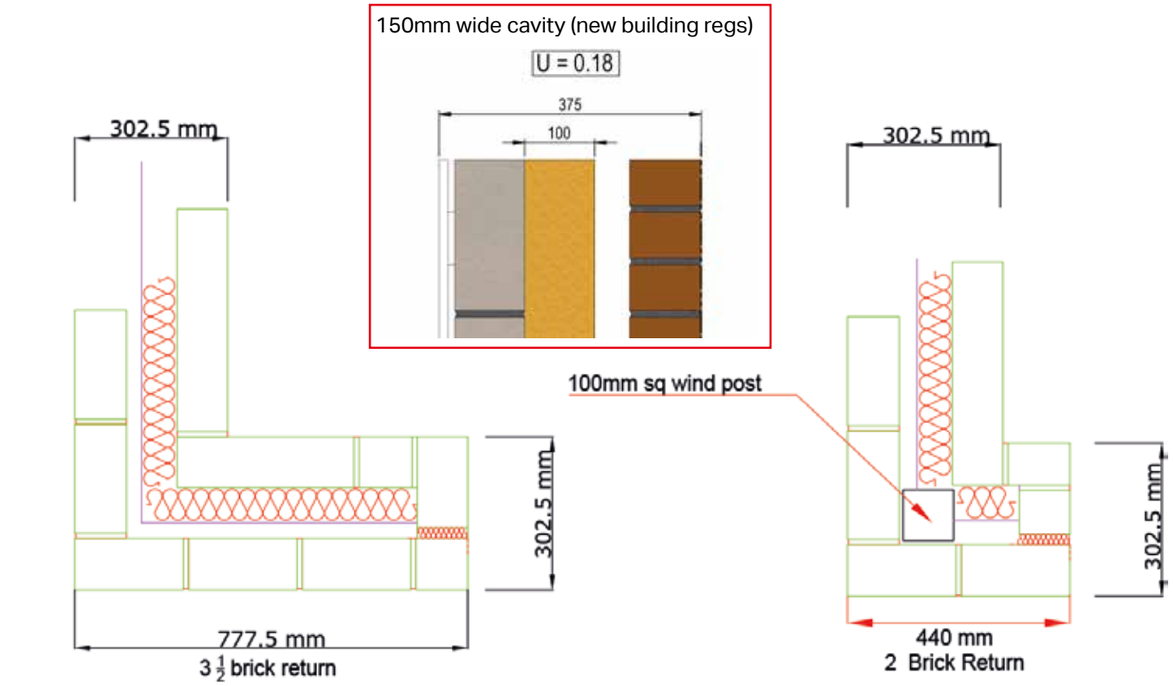

Minimum Brick Return without Wind Post

Minimum Brick Return with Wind Post

(When adjacent/in line with 4m unsupported span)

Recommended Brick Return
Note: Supper Insulated Columns must incorporate 100mm sq wind post

STANDARD SUPPORT FOR TAPERED BOXGUTTERS

When a tapered box gutter is used, the standard support for the beam is an angle bracket that is fixed to the house wall running along the length of the beam. Tapered box gutters use this support in all instances and do not require any additional structural support. (Unless being used to replace existing box gutters, see page 81-85)

STANDARD SUPPORT FOR STANDARD BOX BEAM

BOX BEAM WALL BRACKET SUPPORT (BOX BEAM END ABUTTING A WALL)

(NRW001)

First box beam brackets are fixed to the host wall in position. Beams with pre cut openings then locate on the positioned brackets.

BOX BEAM ANGLED WALL BRACKET

(NRPA---/5)

90° angle bracket is fixed to the wall to accommodate the full length of the box beam. This support acts as structural support, no other support required in any instance (along the length of this beam).

PANEL ANGLED WALL BRACKETS

(RRS---/8)

Variable angled bracket is fixed to the wall to accommodate the full length of the panel being fitted to the wall. This support replaces the beam and acts as structural support, no other support required in any instance (along the length of the panel). Only used for intrusions.

BOX BEAM STRUCTURAL SUPPORT FOR 265MM BOX GUTTER

The gallows brackets can be arranged in a corner situation when both beams need to be supported. The bracket can be clad in plasterboard. Full width of box beam requires support gallows bracket 645mm from host wall to end of bracket.

STRUCTURAL SUPPORT IS REQUIRED FOR BOX BEAM WHEN ADJACENT TO A 265MM BOXGUTTER

FRAMES ON 1 SIDE OR BOTH SIDES

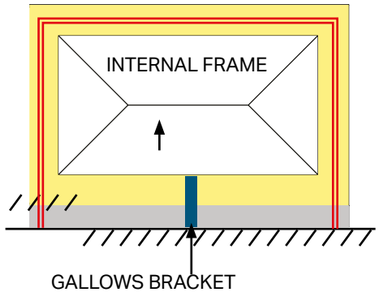

All box beams that support a 265mm fabricated box gutter must be supported by means of gallows brackets, posts or brick piers.
Min/max. dimensions from internal frame stated below.

Up to 3200mm internal frame to internal frame
1 - centrally located gallows bracket post or pier or
2 - one either side of door or window opening, above 3200mm internal frame to internal frame (as below).

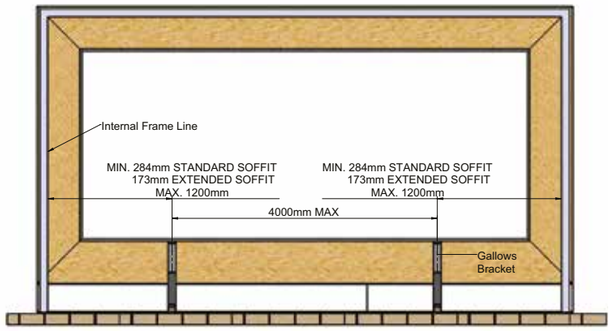

NOTE: Against full height vertical walls, a tapered box gutter would be recommended.

NOTE: Integratred glass units can only be specified if using 265mm box gutter.

Velux must be used if tapered box gutter.

HUP! OR BRICK ON BOTH SIDES

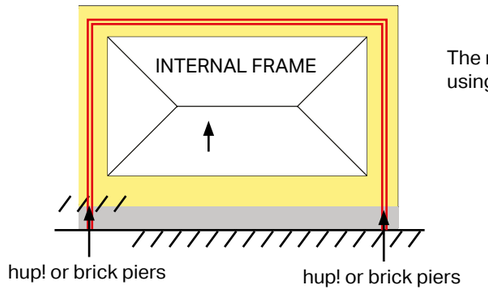

The maximum span at the rear of the roof is 4 metres unsupported, using hup! or brick piers at both ends of the box beam.

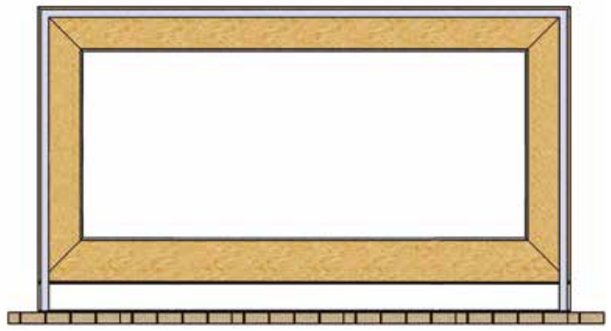

STRUCTURAL SUPPORT - GALLOWS BRACKET - BUNGALOW SITUATION

The aluminium gallows bracket provides support to box beams. It covers both standard situations and extended soffit roofs. Ordered as standard size it covers the width of the box beam and box gutter. Extended gallows brackets can also be ordered.

OPTION 1

Box beam supported on standard gallows bracket shown under a bungalow soffit. To maximum soffit width of 100mm.

OPTION 2

The standard bracket may be cut back 100mm to suit fitting to a vertical wall (end cap provided).

OPTION 3

The bracket can be made to a bespoke size to accommodate for different size situations, but it has its limits. It can be made any size within 645mm – 1195mm. The largest soffit size a gallows bracket can cover is 550mm, anything larger then a custom bracket has to be made to suit. The bracket must cover the full depth of the beam and box gutter and any soffit (if applicable).

GALLOWS BRACKET - CORNER

The gallows brackets can be arranged in a corner situation when both beams need to be supported. The bracket can be clad in plasterboard. Full width of box beam requires support gallows bracket 645mm from host wall to end of bracket (see page 49).

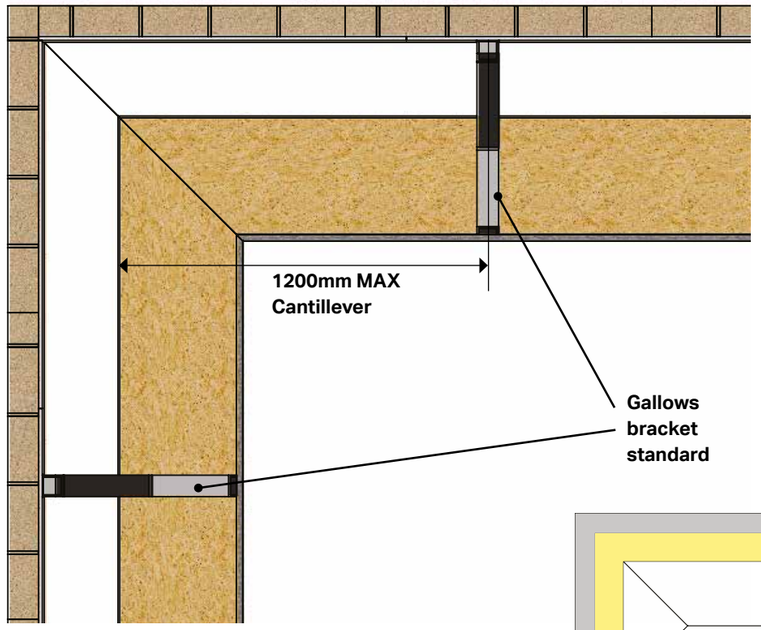

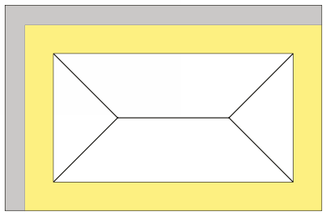

RULES

- Maximum canslatever of 1200mm
- Gallows bracket must cover full width (box beam and box gutter width 645mm) plus any soffit on a bungalow (max bungalow soffit size 550mm).

GALLOWS BRACKET - INTERMEDIATE

The distance between gallows brackets and other supports should not exceed 4000mm.

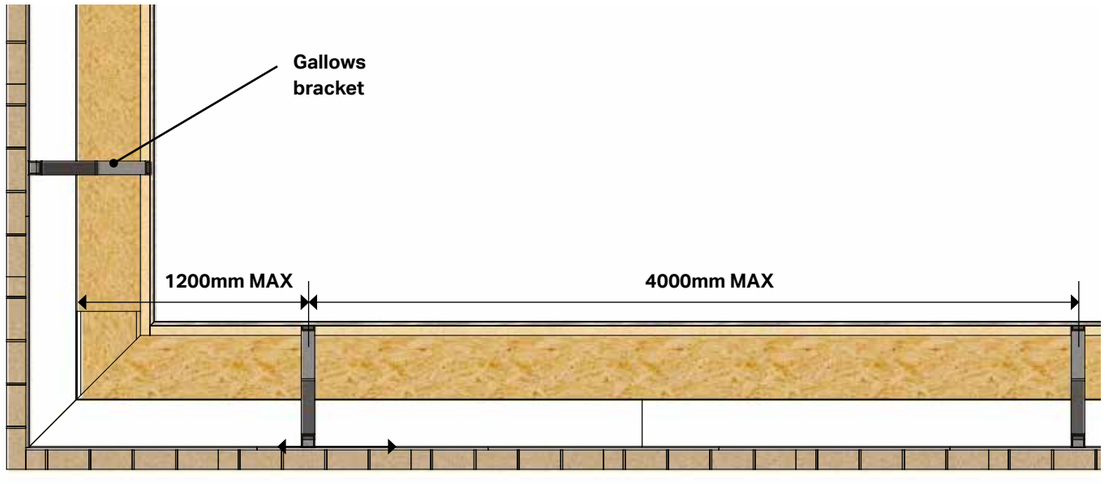

STRUCTURAL SUPPORT - TIMBER STUD WORK

The simple and most available method of support is timber stud walling. It is quick to put up and gives a good finish.

TIMBER COLUMN SUPPORT

The timber column is 645 x 645mm, boarded internally with 12.5mm plywood and then plaster boarded on the exterior. Its compact structure makes it a neat finish in the corner of the room while providing structural support.

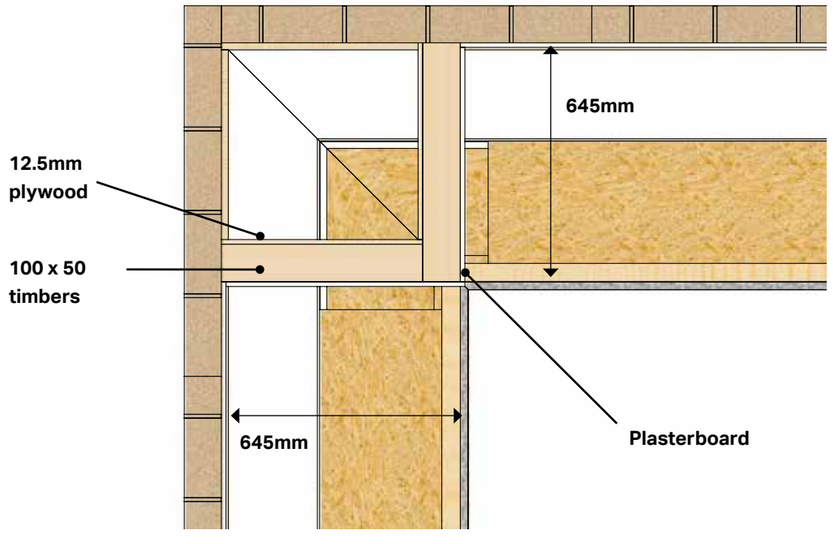

RULES

- Stud wall must cover full width (box beam and box gutter width 645mm)

STRUCTURAL SUPPORT - TIMBER STUD WORK

TIMBER CORNER SUPPORT

The timber corner supports are simple stud walls, 645mm deep that support the box beam. Each wall is boarded with 12.5mm plywood and then finished with plasterboard to its exterior.

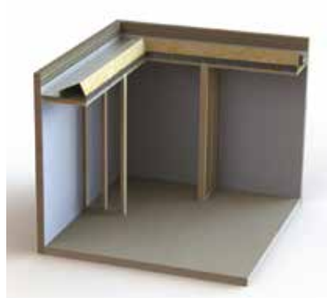

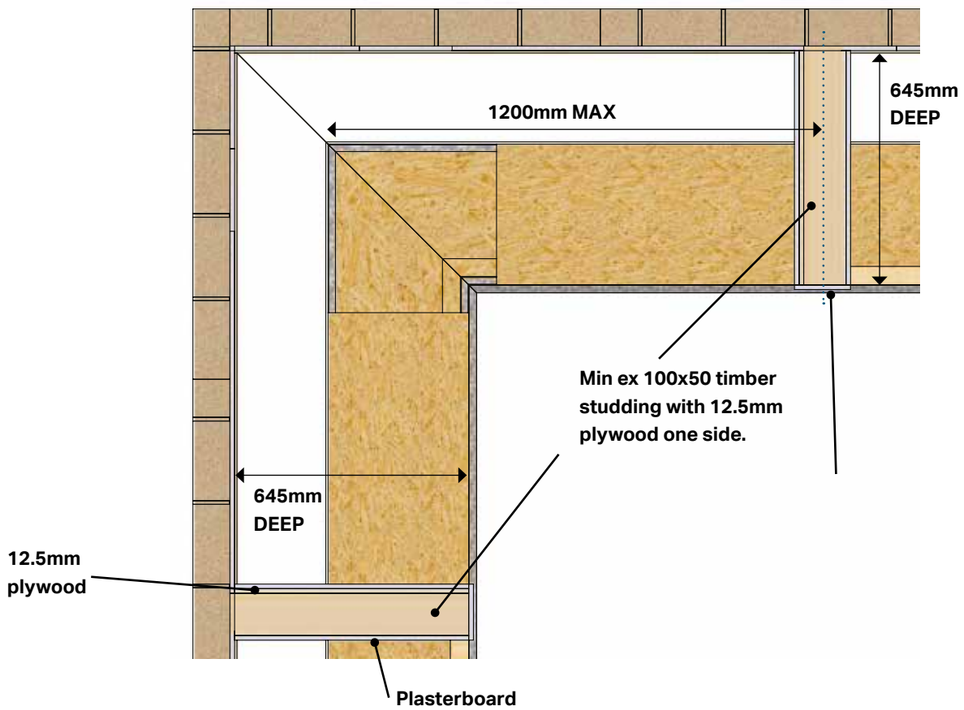

RULES

- Maximum canslatever 1,200mm
- Stud wall must cover full width (box beam and box gutter width 645mm)

STRUCTURAL SUPPORT - TIMBER STUD WORK - INTERMEDIATE

The simple and most available method of support is timber stud walling. It is quick to put up and gives a good finish when using plasterboard.

TIMBER INTERMEDIATE SUPPORT

Intermediate supports are appropriate when the box beam extends longer that 4000mm along its length before reaching the next structural support at a corner. An intermediate support is placed. A maximum of 4000mm from the previous support to carry the box beam.

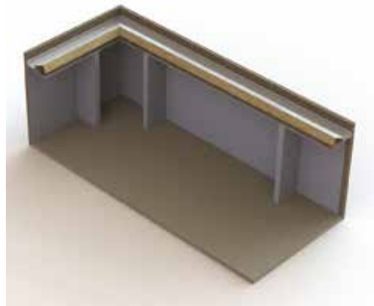

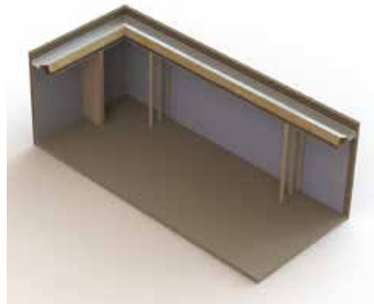

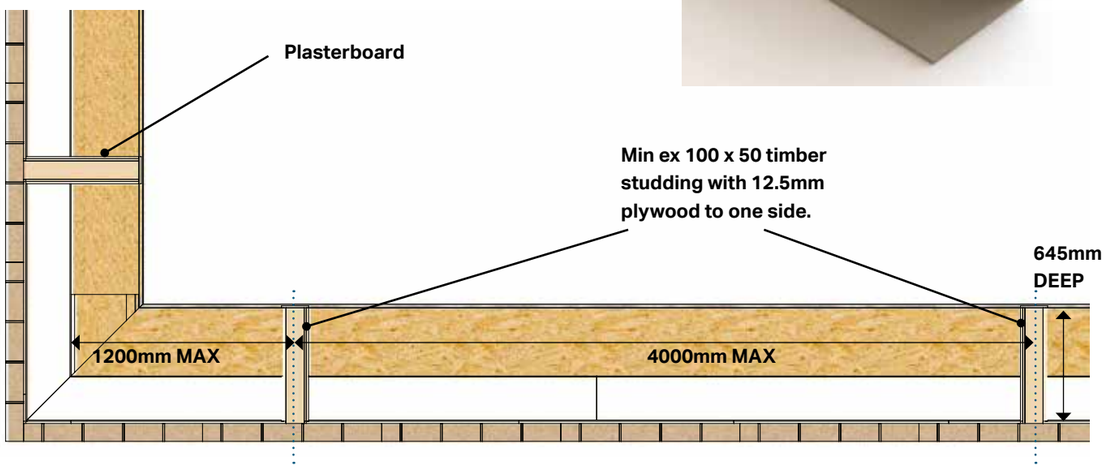

INTRUSIONS

In some cases a roof may have to accommodate intrusions into the footprint of the roof, these are such things as chimney breasts. In this situation, the panel is adapted around the intrusion and a tapered box gutter is used. This creates many configurations of box gutters that allow water to drain away effectively.

INTRUSION TAPERED BOX GUTTER

The panel is always supported by a wall mounted angle bracket that runs along the length of the intrusion. This instance does not require any additional structural support.

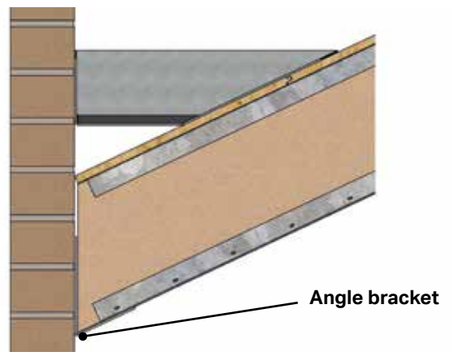

MINIMUM INTRUSION SIZES

The tapered box gutter above the intrusion panel will always follow the tapered box gutter rules. However where the tapered box gutter meets the box beam, there are many variables to consider.

Minimum intrusion depth line
Internal frame line

A Intrusion standard

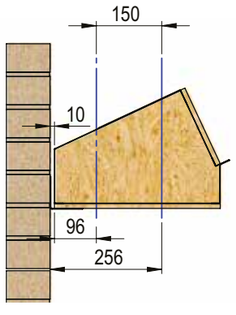

B Intrusion extended

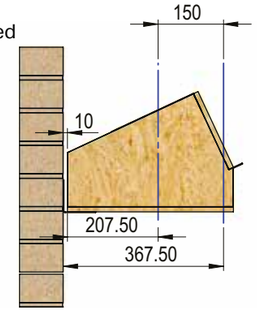

C 265 standard intrusions

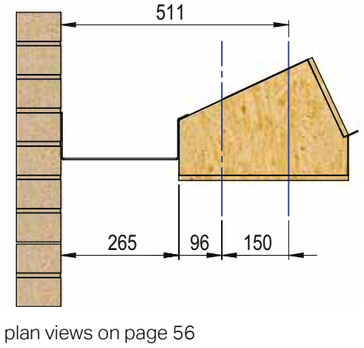

D 265 extended intrusion

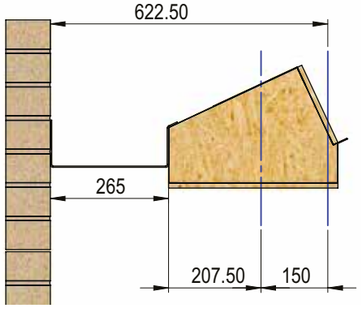

NOTE: see plan views on page 56

INTRUSIONS

There are options for what kind of box gutter (265mm or tapered box gutter) the intrusion will run into, these follow the minimum intrusion size rules (see page 55).

TAPERED JOINING STANDARD

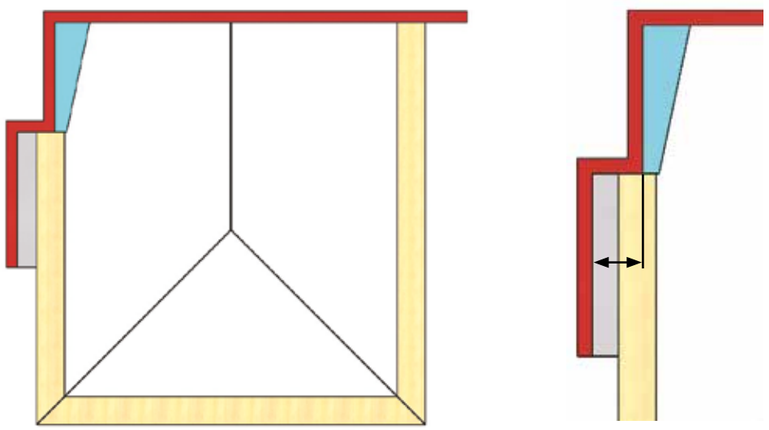

C 511mm MIN INTRUSION
D 622.5mm EXTENDED SOFFIT WITH MIN INTRUSION

TAPERED JOINING TAPERED

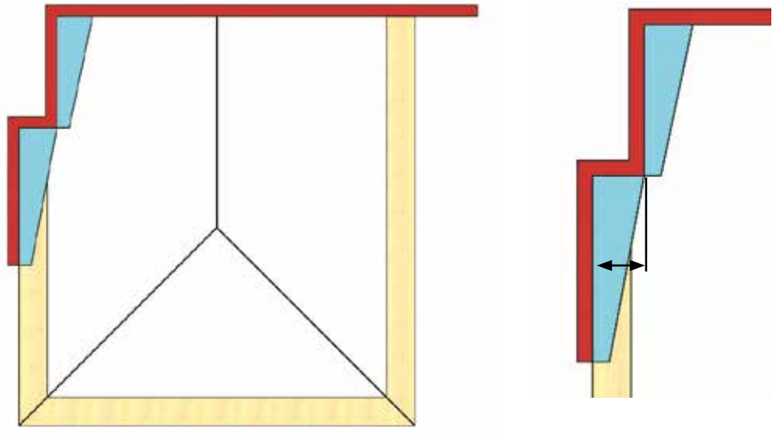

A 256mm MIN INTRUSION
B 367.5mm EXTENDED SOFFIT WITH MIN INTRUSION

KEY

HOST WALL | BEAMS | TAPERED BOXGUTTER | BOXGUTTER

CENTRAL INTRUSIONS

Examples following rules on page 55.

TAPERED JOINING STANDARD

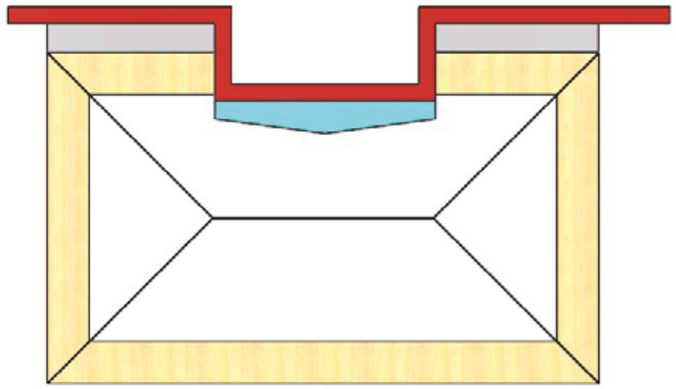

TAPERED JOINING TAPERED

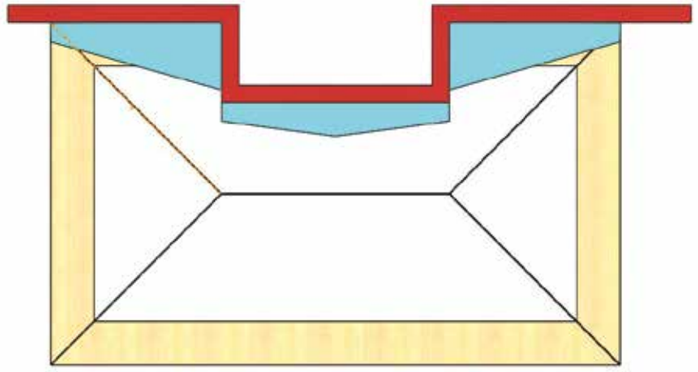

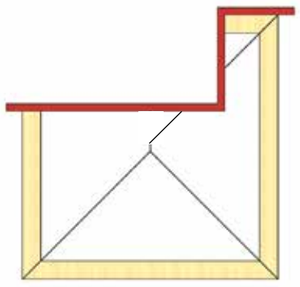

Double hipped georgian intrusion

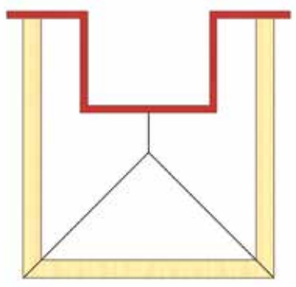

Georgian central intrusion

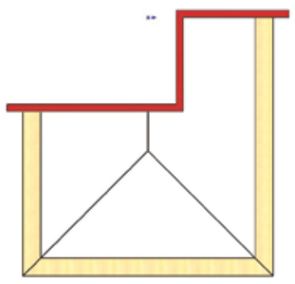

Georgian large intrusion

KEY

HOST WALL | BEAMS | TAPERED BOXGUTTER | BOXGUTTER

DETAILED INTRUSION RULES

INTERNAL FRAME LINE

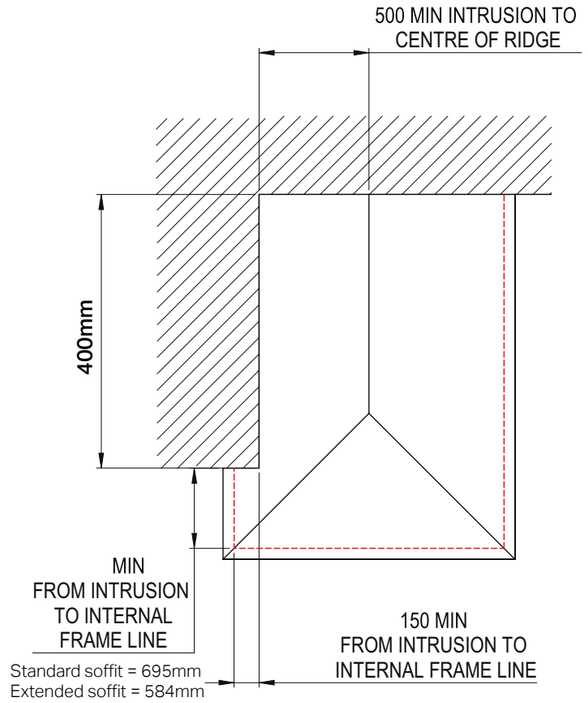

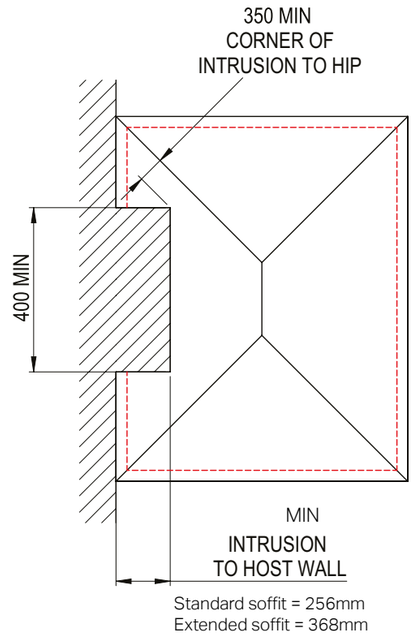

No glazing allowed in roof sections where there is an intrusion

Roof lights are not premitted where there is an intrusion.

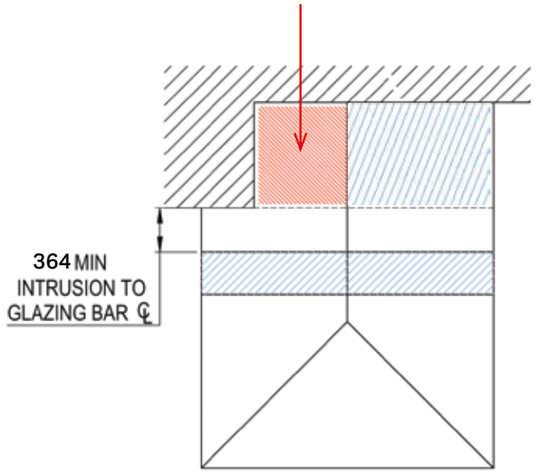

DETAILED INTRUSION RULES

INTERNAL FRAME LINE

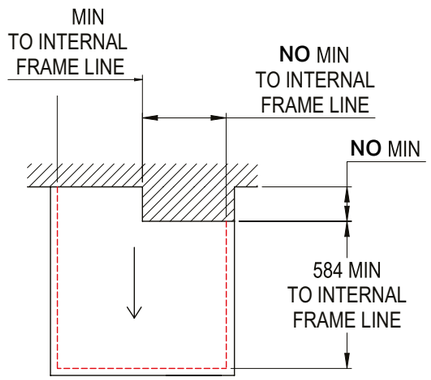

Standard soffit = 166mm
Extended soffit = 90mm
Super extended soffit = 190mm

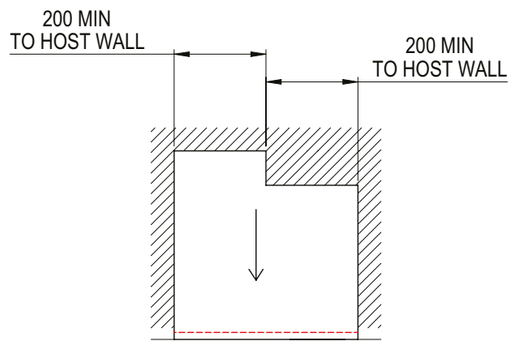

NOTE: If below 200mm specify as soil pipe cutout.

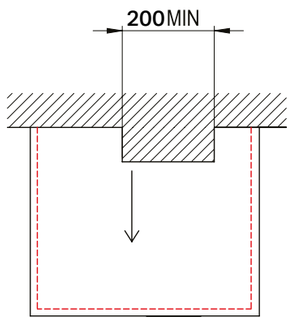

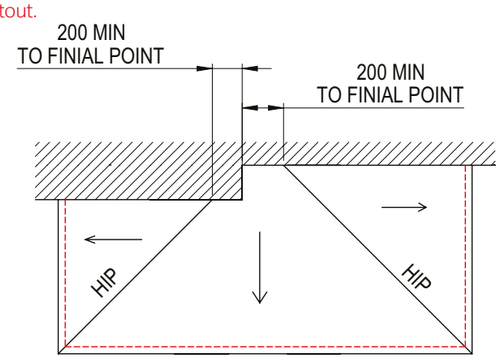

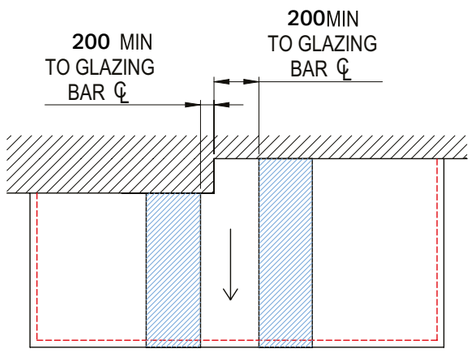

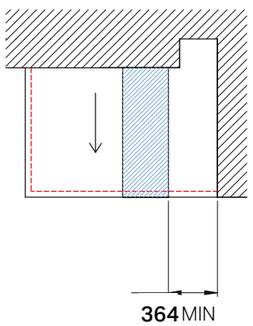

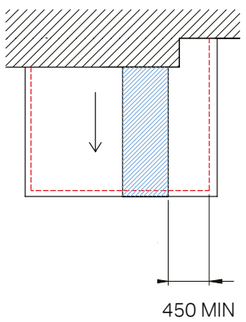

BOX BEAM ON FRAME

40MM SOFFIT ON FRAMES

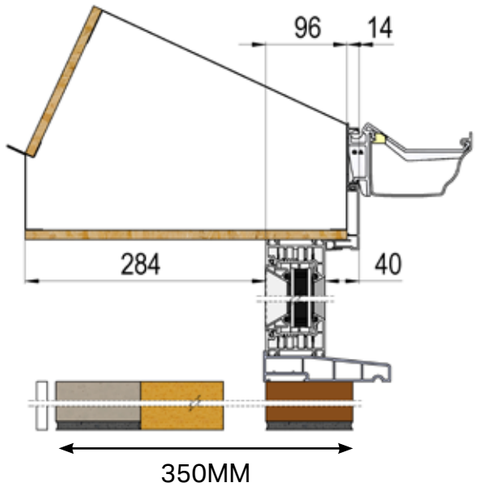

151.5MM SOFFIT ON FRAMES

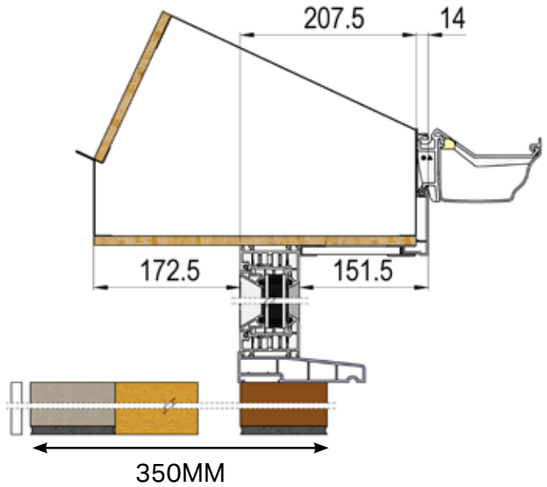

BOX BEAM ON BOUNDARY WALL

-190MM SOFFIT FROM EXTERNAL FACE OF BRICK WALL

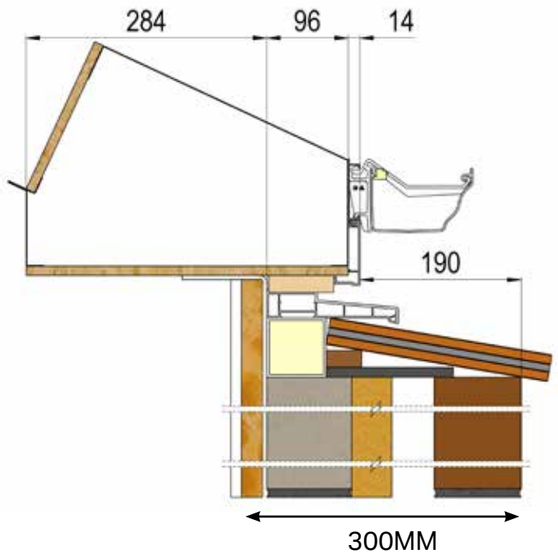

0MM SOFFIT / SAT ON 150MM CILL

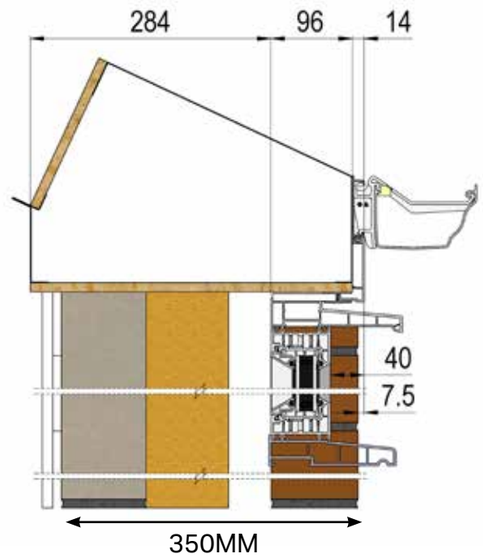

Notes for -190mm Soffit

- Wall straps fixed to underside of the beam and 1m down face of blockwork at 2m centres.
- Fit 25mm insulated plasterboard PL4015 to wall to prevent thermal bridging.
- 12.5mm plasterboard on adhesive dabs to the remainder of the wall.
- Two rows of creasing slates with staggered joints bedded in mortar with slate slips as required.
- Continuous DPC run across the cavity closer, up the face of the corner post and taped to the top surface.
- 70mm PVCu corner post cladding filled with insulated.
- Weep holes at base of wall 1.2m centres.

BOX BEAM ON BRICK WORK

72.5MM SOFFIT FROM FRAME OR 40MM FROM BRICK WORK

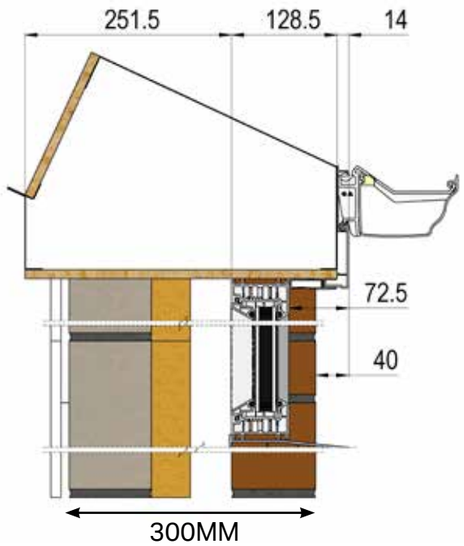

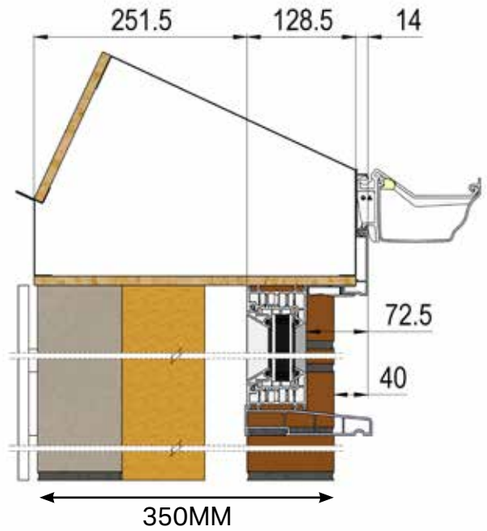

126.5MM SOFFIT FROM FRAME OR 94MM FROM BRICK WORK

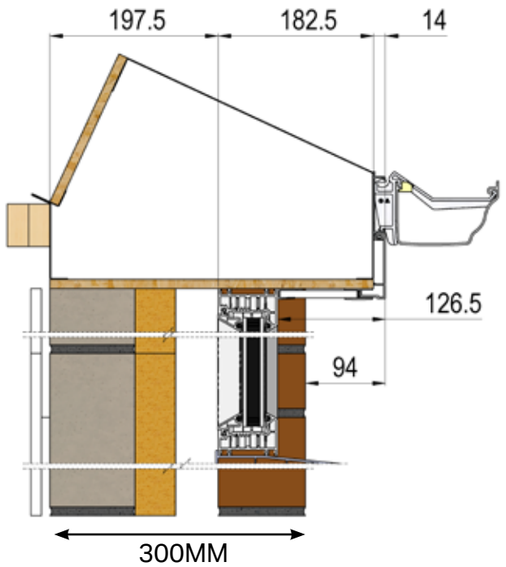

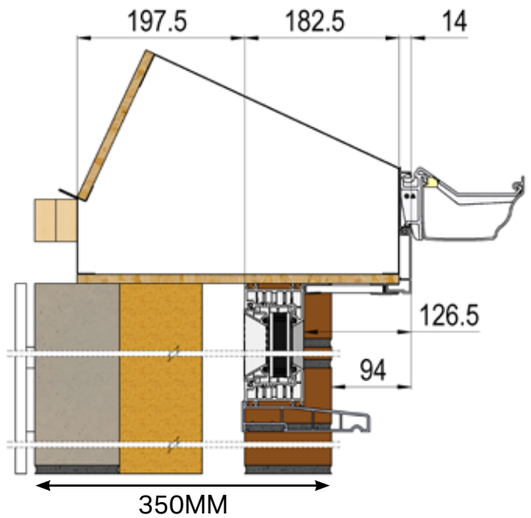

BOX BEAM ON HUP!

These are the options available when hup! touches the underside of the box beam. .

HUP! ON FRAME WITH 72.5MM SOFFIT

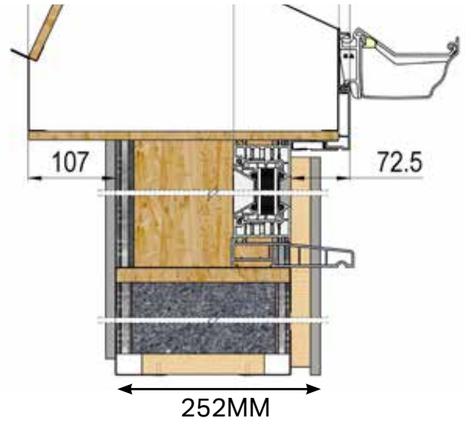

HUP! WITH 199MM SOFFIT FROM EXTERNAL FRAME

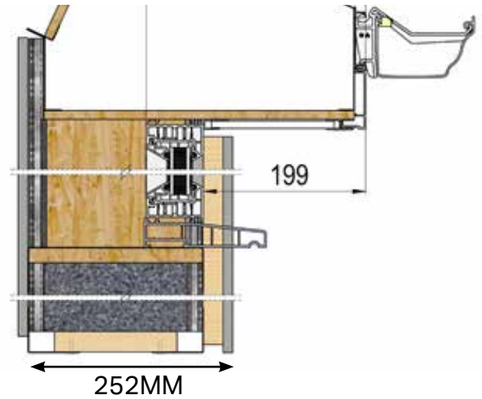

We recommend the following options when hup! doesn't touch the underside of the box beam and when you have dwarf walls.

HUP! ON FRAME WITH 40MM SOFFIT

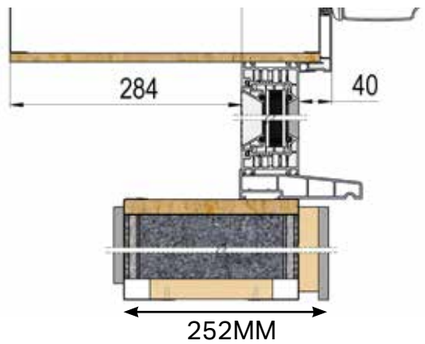

HUP! ON FRAME WITH 151.5MM SOFFIT

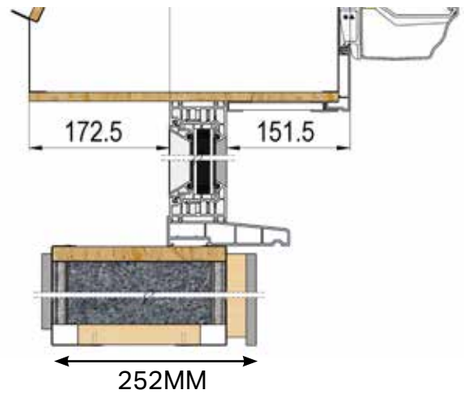

BOX BEAM ON HUP!

The following options are available when hup! doesn't touch the underside of the box beam and when you have dwarf walls.

HUP! ON FRAME WITH 72.5MM SOFFIT

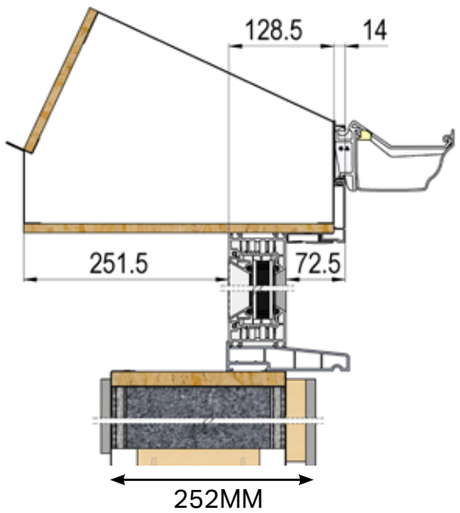

HUP! ON FRAME WITH 126.5MM SOFFIT

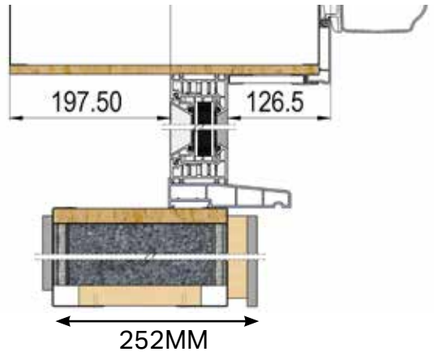

HUP! ON FRAME WITH 199MM SOFFIT

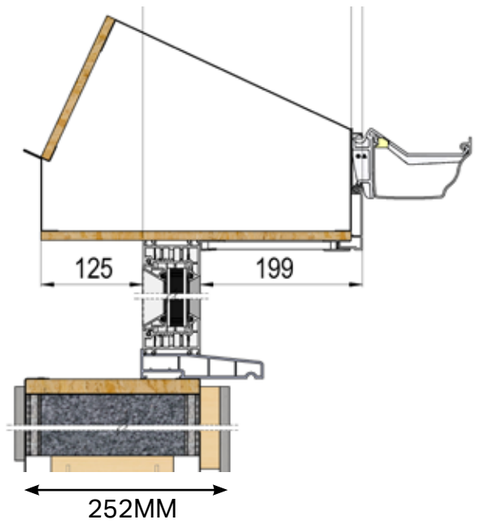

SOFFIT RELATIVE TO EXTERNAL FRAME

OPTION 1

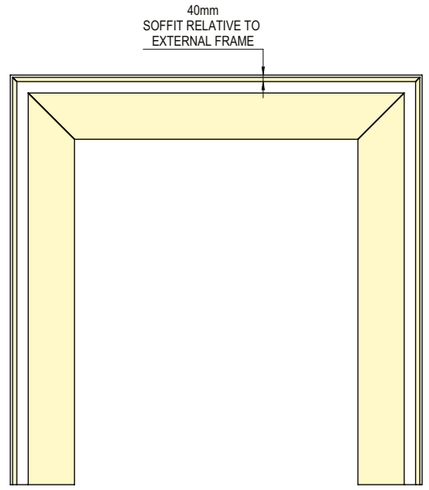

OPTION 2

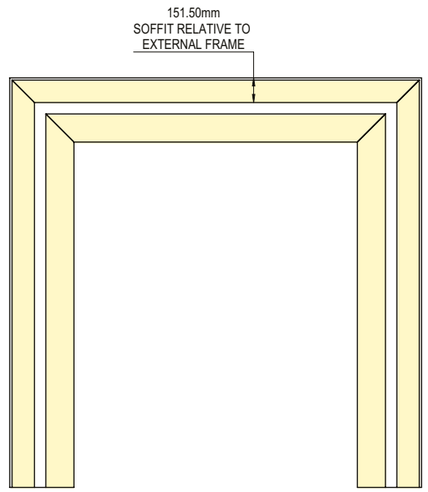

SOFFIT RELATIVE TO EXTERNAL BRICK

OPTION 1

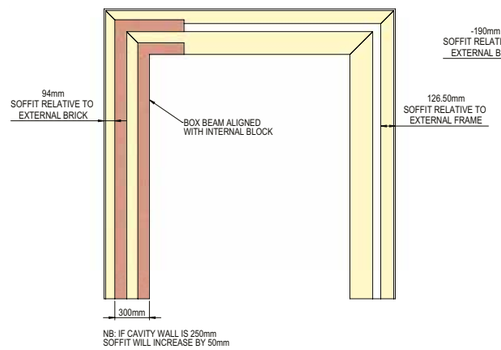

OPTION 2

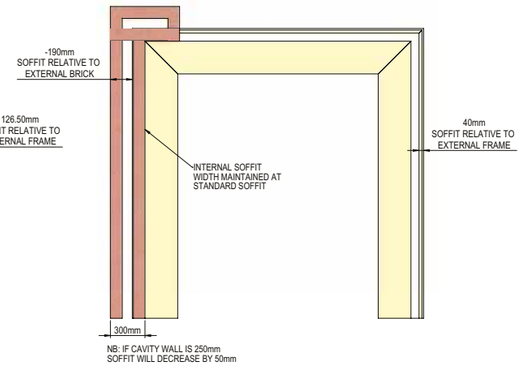

OPTION 3

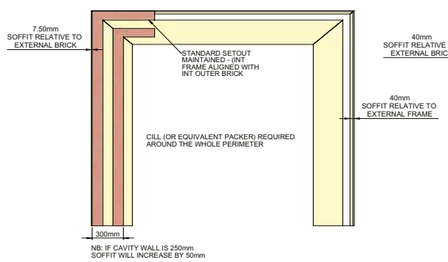

OPTION 4

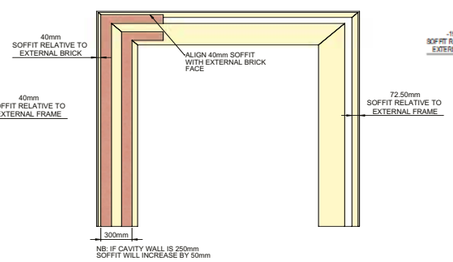

OPTION 5 - HUP! WALLING

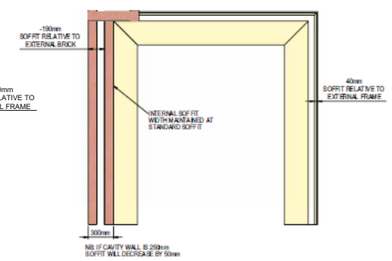

LEAN- TO RAKED/ ANGLED STIFFENER

Frame stiffener (Optional)
Raked frames on lean-to roofs are typically connnected to the supporting frames directly below where frames below are:

- French doors
- Sliding Patio doors
- Bi-fold doors

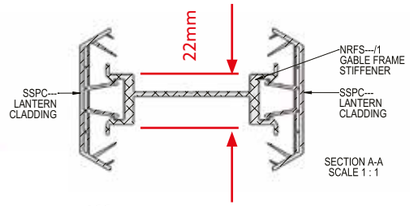

It is recommend to use our 22mm deep aluminium frame stiffener.

<u>It is optional so must be asked for</u>
Fastened by strap to the underside of the box beam, secured to the head of the door set and adjacent frames/columns/brickwork. The stiffener will reduce the amount of movement between the upper raked frame and lower support frame.

Note: Aluminium stiffener and cladding may need notching/routering for frame drainage. Upper frame must be face drained.

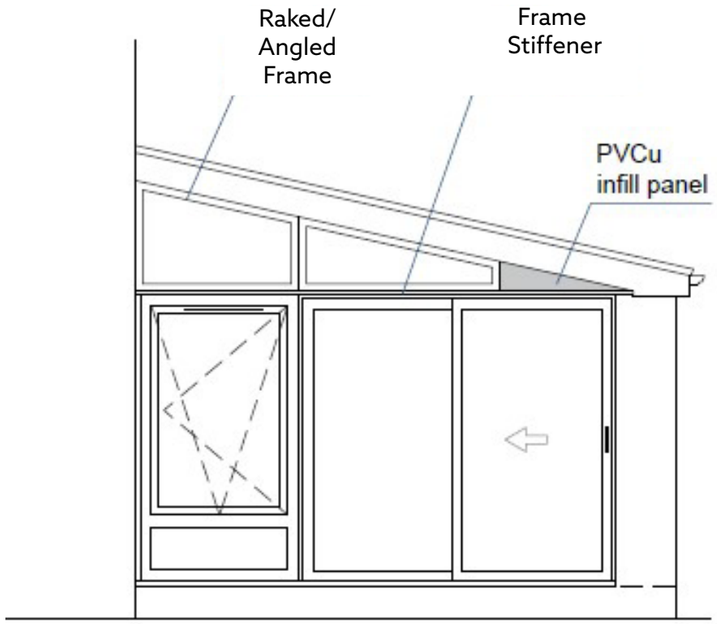

LEFT-HAND SIDE ELEVATION

When using Ultraroof with hup! walls on Lean-tos or Gables, frame stiffeners will not run the entire length of the elevation. When hup! corner columns are specified, they run up to the underside of the roof and are raked as required. Frame stiffeners will be supplied across the top of door frames/openings

GABLE REINFORCING GUIDANCE

FRAME STIFFENER OPTION
Gable frames are typically connected to the supporting frames below using the gable stiffener, shown below, that is provided as standard with Ultraroof. Frame stiffener claddings can be specified in white, light oak, mahogany or rosewood as standard. Frame stiffener can only be used upto 1800mm span on doors. However, if the width of the gable glazing is greater than 4000mm, we recommend a Gable Reinforcement regardless. NOTE: Frame stiffener is optional on lean-to raked frame returns and therefore must be asked for if required. Note: Aluminium stiffener and cladding may need notching/routering for frame drainage. Upper frame must be face drained.

PART	IMAGE	SPECIFY CRITERIA
NRFS001 GABLE BEAM PLATE	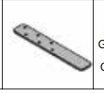	1 PER BOX BEAM / GABLE FRAME STIFFENER CONNECTION

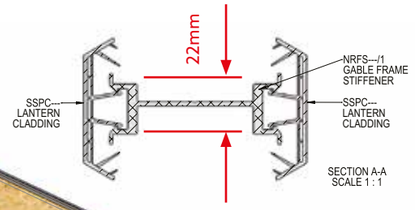

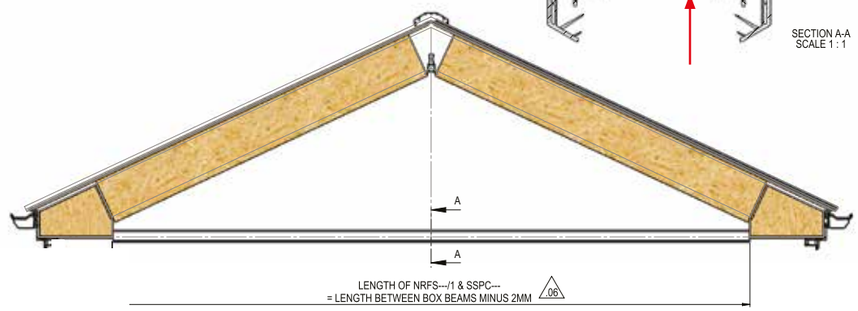

All gable frame sizes are provided as tight sizes. You will need to adjust your gable frame size slightly to give you clearance between the underside of the roof and the gable frame to aid installation .

GABLE REINFORCING BOX SECTION OPTION
Where additional movement is expected at the end of a gable it may be beneficial to request the Gable Reinforcing Box Section. This will prevent flexing of frames particularly when specifying bi-folds or doors to the front of the gable.

BI-FOLDS IN ULTRAROOF GABLE

Ask for the gable reinforcing box section if required when ordering. You will need to consider:
1. The height of the stub cill that you are going to use (not supplied)
2. The position of the L section, shown in green below. This is particularly important if you are installing open in bi-folds. The standard position is on the centre line of the reinforcing box section but you can specify it in another position if required. Please let us know at the point of ordering since this will affect the height of you gable frames.

GABLE REINFORCEMENT BOX OPTION .16
IF STRUCTURALLY SPECIFIED
REPLACES NRFS---/1 FRAME STIFFENER
AND SSPC--- LANTERN CLADDING

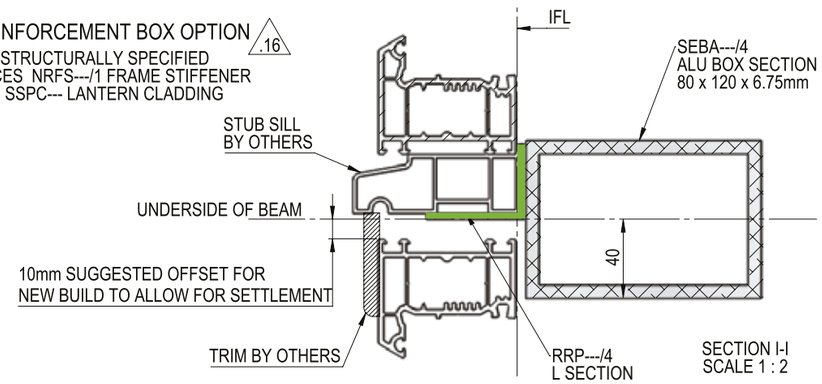

GABLE WITH BRICKWORK DESIGN OPTIONS

What height are the brickwork returns?

Soffit height

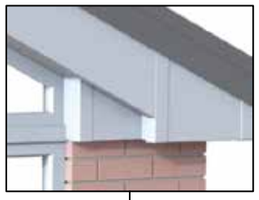

Does the gable feature doors, or otherwise require enhanced reinforcement?

NO

Fit Gable Stiffener (default) and construct stepped fascia detail.

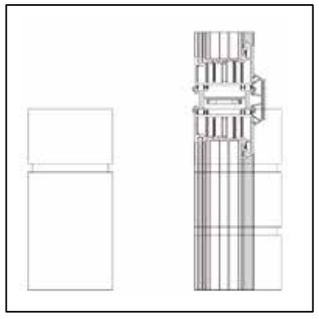

YES

Specify Gable box, 150mm cill between upper and lower frames & infill raked frame with PVCu wedge or similar (where applicable).

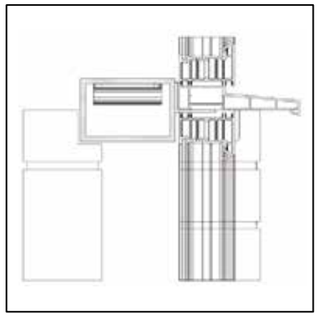

Full height

Specify Gable box and a stub cill between upper and lower frames (where applicable). If internal blockwork return is 1500mm or more see option on page 70.

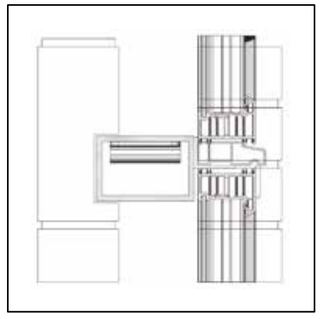

Note: when Gable box is present, notching will be required to internal blockwork to accommodate.

GABLE WITH BRICKWORK DESIGN OPTIONS

FRAME STIFFENER

Default offering when doors are not present and no other requirement for enhanced reinforcement. Also suitable above single door opening. Compatible with options 1, 2 & 4 (see pages 61-62).

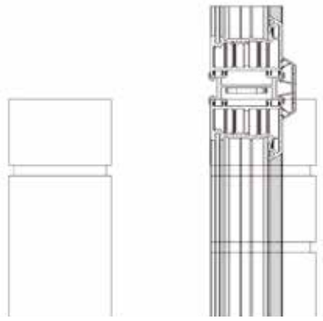

EXAMPLE SHOWS BRICKWORK OPTION 1

REINFORCED BOX WITH MIN. 150MM CILL

Optional detail; required for use with bi-fold doors or other enhanced reinforcement needs.
Compatible with all brickwork options. This option to be used in conjunction with super-insulated columns.

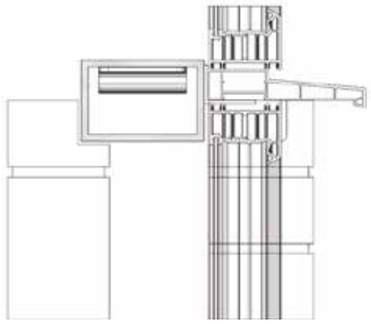

EXAMPLE SHOWS BRICKWORK OPTION 2

REINFORCED BOX WITH STUB CILL

Optional detail; required if continuing brickwork up to full height and internal blockwork returns are below 1500mm (see detail). Compatible with all brickwork options (see pages 61-62).

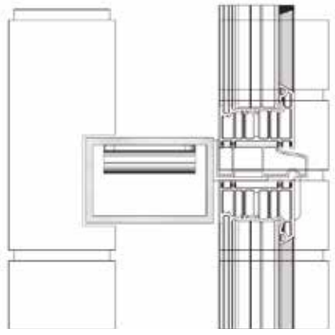

EXAMPLE SHOWS BRICKWORK OPTION 3

GABLE WITH BRICKWORK DESIGN OPTIONS

BRICKWORK OPTION 3 SPECIFIC
When specifying brickwork option 3 (page 62); a cill is by default always required beneath the beam. This means that the frame stiffener cannot be used.

Default offering in this case is therefore reinforced box with min. 150mm cill, where the cill height relative to the adjacent reinforced box is lower than with other options. Stub cill option can also be used when continuing brickwork up to full height.

EXAMPLE SHOWS BRICKWORK OPTION 3 WITH 150MM CILL RUNNING THROUGH.

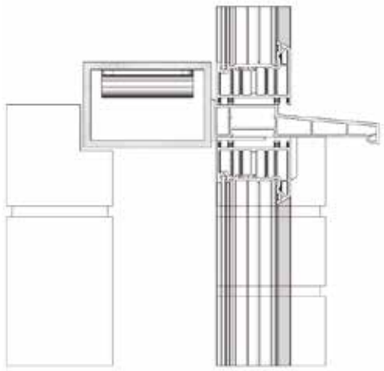

EXAMPLE SHOWS BRICKWORK OPTION 3 WITH 150MM CILL STOPPED SHORT FOR FULL HEIGHT BRICKWORK.

SUPER-INSULATED COLUMNS
When specifying super-insulated columns, reinforced box with min. 150mm option must be used.
super-insulated columns compatible with options 1 & 3 only (see pages 61-62).

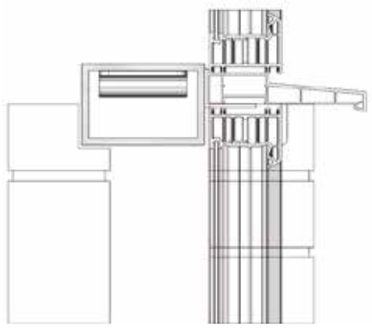

EXAMPLE SHOWS BRICKWORK OPTION 1

GABLE WITH BRICKWORK DESIGN OPTIONS

SUPER-INSULATED COLUMNS CONTINUED
When specifying an intermediate super-insulated column across the front of the gable a 150mm cill must be used to adequately shroud the top of the column.

Internal finish is at fitters discretion; to be discussed with the customer – no materials supplied for this.

BRICKWORK STRAP DETAIL
If the internal blockwork return across the front of the gable is greater than or equal to 1500mm on both sides then a brick strap may be used. This should be fixed up through the underside of the box beam then fixed to and sandwiched between the full height blockwork.

Lean to gable stiffener

JOINING TWO BEAMS

When a roof length extends further than 7000mm, then two beams must be joined. The way the two box beams join is shown below.

Metal cleats are used with their standard fixings to join the box beams together.

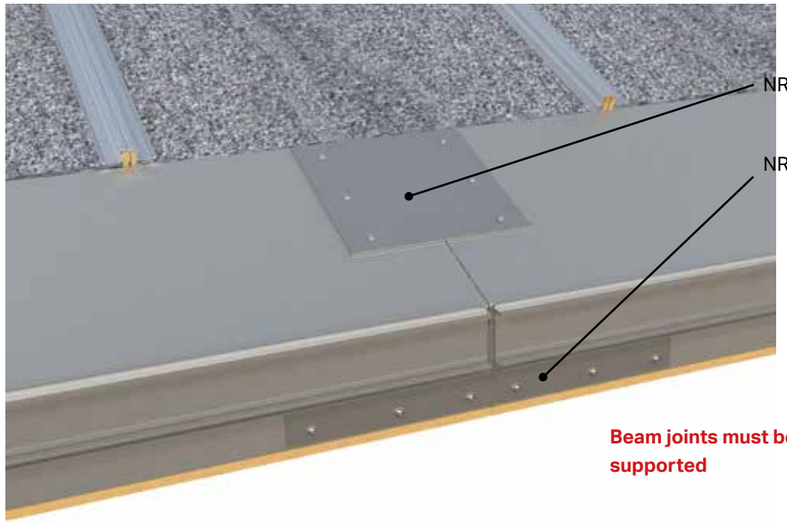

SUPPORTING JOINT ON BRICK

When two beams need to be joined they need to be supported, one option is a brick pillar. The pillar can be built as shown below.

Standard soffit

Extended soffit

JOINING TWO BEAMS

Before the beam is placed on the brick pillar they must be connected together with a flat abutment bracket that spans the two beams. Use the fixings provided to secure the plate in place as the plate will be inaccessible when the beam is in position over the brick pillar. NOTE: this is only used when a beam is joined on a brick pillar.

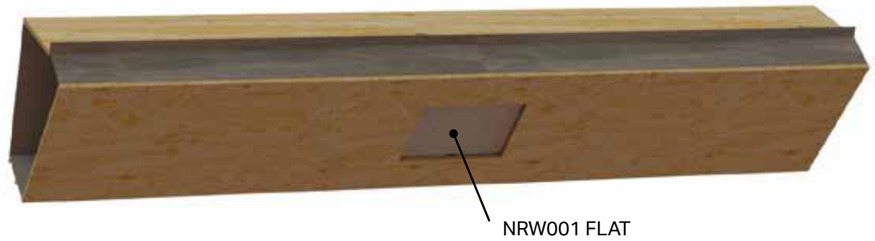

Standard soffit shown

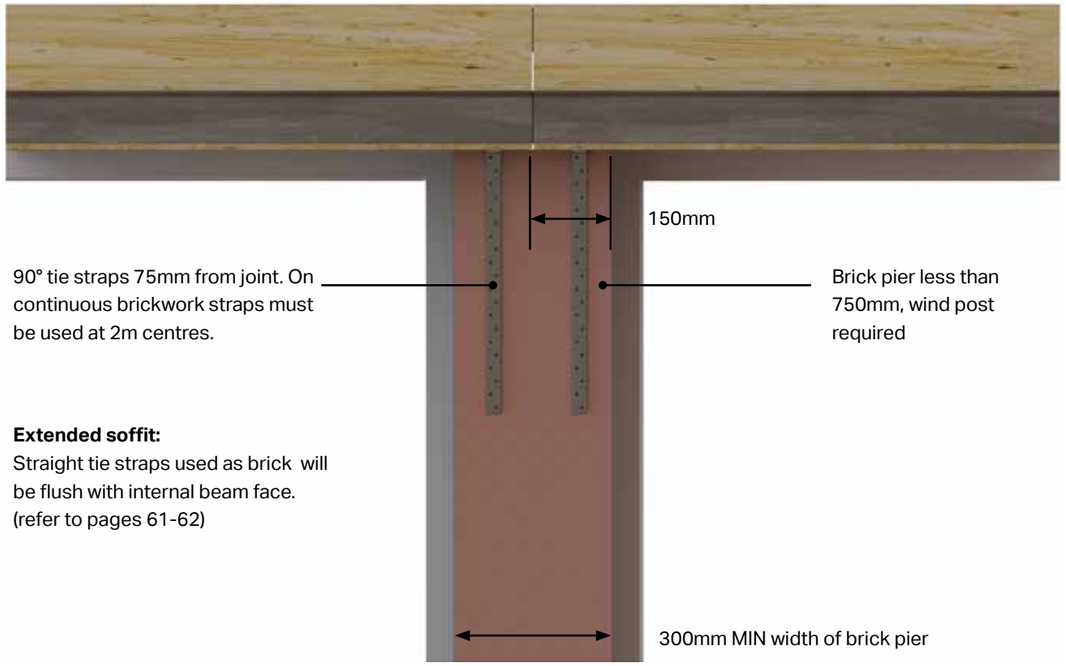

RULES

- The minimum size for the brick pillar is 300mm wide (wind post required).
- The join must be minimum 150mm from the brick external face.
- Brick pillar width less than 750mm in width, a wind post is required.

INTERNAL BRICK BEAM JOINT

When a beam joint occurs along an existing wall, a brick pier can be used to support the beam from below. The pier can be built up to the existing wall or can be left self standing, below shows the situations this occurs.

265mm box gutter situation

Tapered box gutter situation

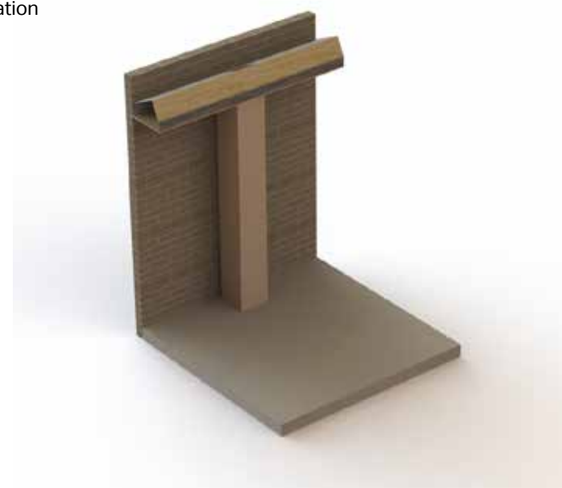

RULES

- The minimum size for the brick pillar is 240mm x 300mm.
- The join must be minimum 150mm from the brick external face on the pillar.
- Pillar can be left free standing or built back to the host wall.

SUPPORTING JOINT ON POST

An alternative way of supporting a beam joint is the use of an aluminium support post placed under the beam joint. The post is cut into the existing brick work (if necessary) and fixed to the concrete floor. A plate on top of the beam connects the two beams together. The plate sits in the cut out position of where the abutment bracket would sit.
NOTE: first beams are joined on the post fixing plate then metal cleats are added later.

Standard soffit

Extended soffit

BOX GUTTER FOAM

(BGI072)

The cavity wall brick must be cut to allow the post to sit 10mm from the external brick, this is packed off with box gutter foam to create a thermal break. A bigger void at the base must be cut into the wall to allow access to the fixings at the base of the post.

INTERNAL JOINT ON POST

When a beam joint occurs along an existing wall, a post can be used to support the beam from below. (Also refer to page 74).

265mm box gutter situation

Tapered box gutter situation

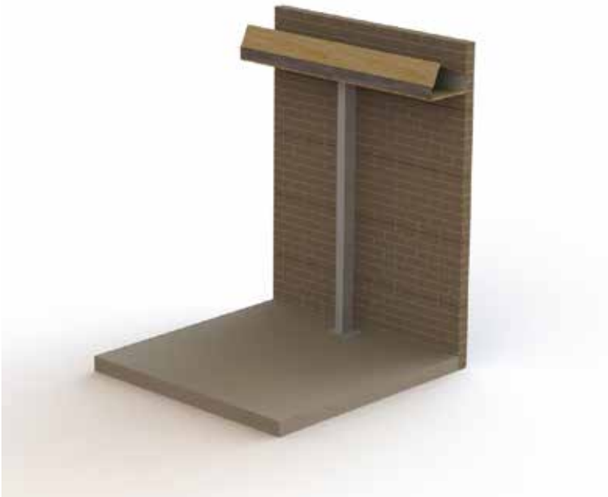

RULES

- Post must sit in abutment bracket cut out position, the bracket cut out is pre cut depending on the type of box gutter required on the beam.

FIXING PLATE

The beams are fixed to the post using the fixing plate with the same footprint as an abutment bracket. The metal cleats are then fixed after the beams are fixed to the post. The post position in relation to the beam will vary depending on the soffit size.

Standard soffit

Extended soffit

RULES

- Post must sit in abutment bracket cut out position, the bracket cut out is pre cut depending on the type soffit on the beam.

BOX BEAM ON SUPER-INSULATED COLUMN

If your installation contains a super-insulated column, then it is possible to support the box beam on the column providing that the beam is installed with the following details.

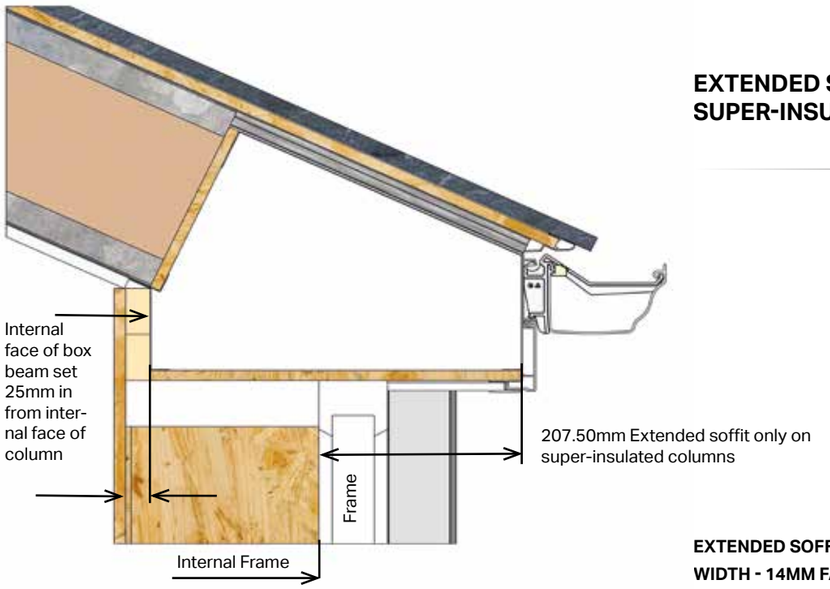

EXTENDED SOFFIT ONLY ON SUPER-INSULATED COLUMN

EXTENDED SOFFIT = 151.5MM + 70MM FRAME WIDTH - 14MM FASCIA = 207.5MM

GEORGIAN ROOF ON A VICTORIAN FRAME - TUDOR

Before

After

It is possible to fit an Ultraroof Georgian shape to the top of an existing Victorian conservatory frame. Maximum canslatever 1,200mm from corner.

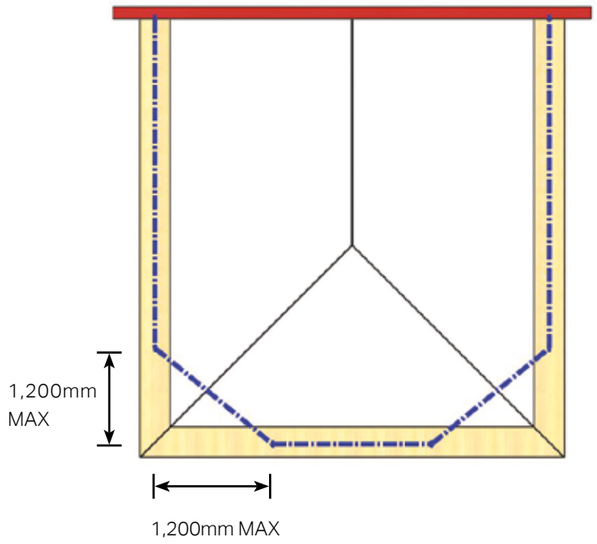

Tudor conservatory frame ----------

OUT OF SQUARE - WINDOW FRAMES/MASONRY SUPPORTS

Out of square roofs must be specified with extended soffits only. The external soffit will vary in width. This must be agreed with the customer.

Below shows the example of frames out of square by 50mm (i.e. visual difference in soffit width of 100mm). The internal pelmet width will also vary.

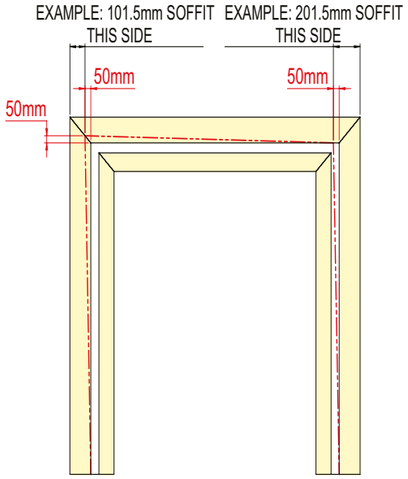

Maximum 5.5° Pitch Variation

Victorian

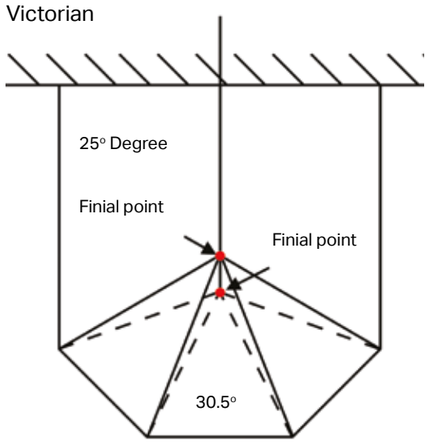

Maximum 13° Pitch Variation

Georgian

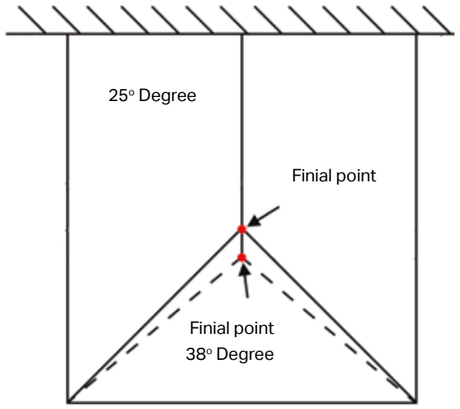

Hipped lean-to

EXTENDING THE RIDGE MAXIMISES GLAZING ALLOWANCE

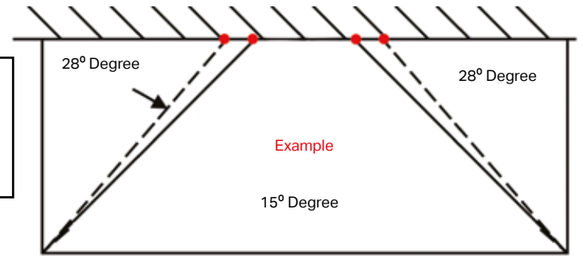

VALLEY SHAPE SCOPE

For roofs incorporating valley gutters the standard pitch rules apply.

GLAZING PANELS PERMITTED | GLAZING NOT PERMITTED | WALL

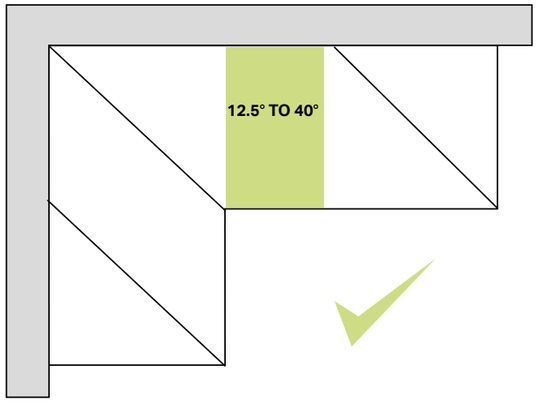

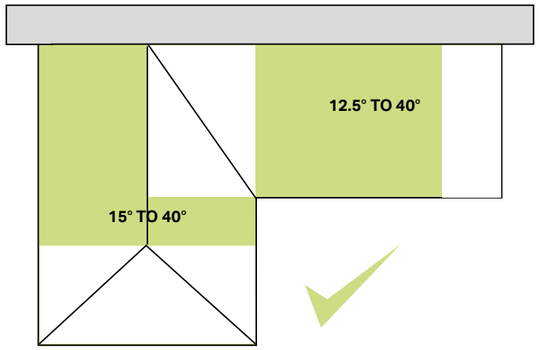

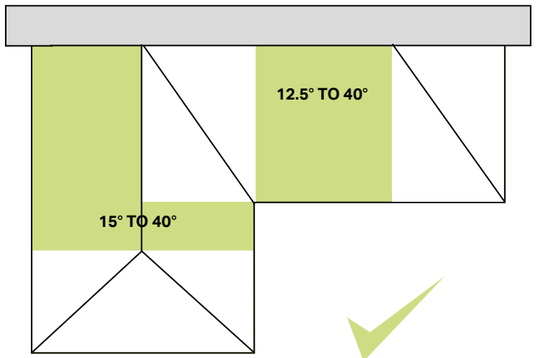

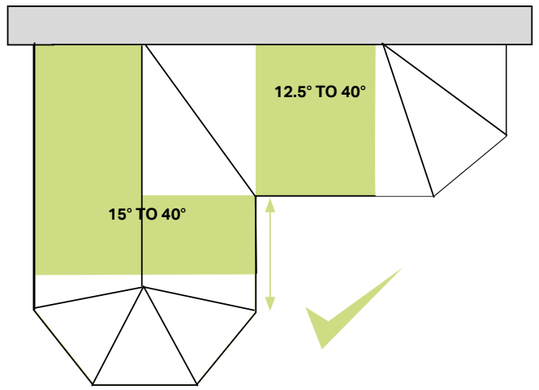

VALLEY SOLID ROOFS

Minimum internal 'point to point' frame sizes.

Note: deduct corner post for frame size

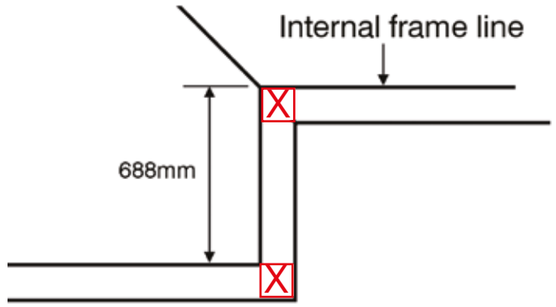

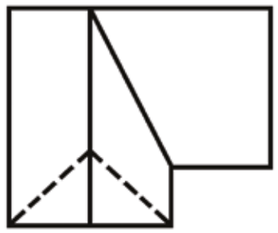

Georgian/ Gable

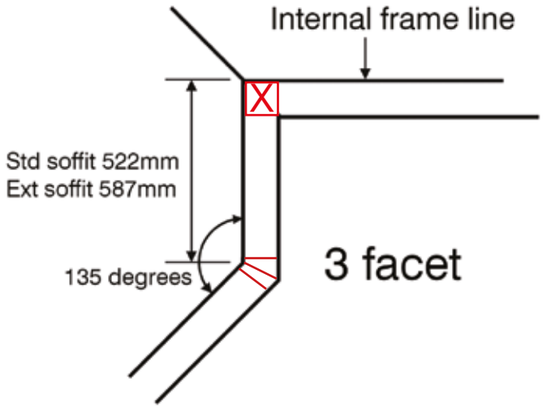

3 facet

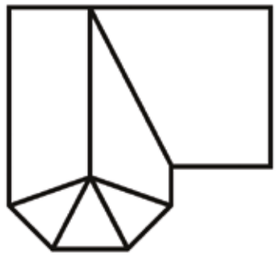

Victorian

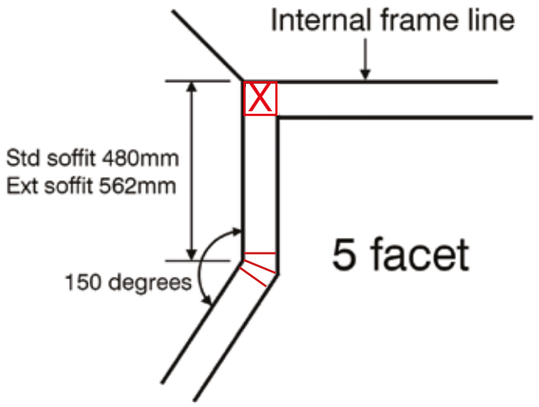

5 facet

Std soffit

Ext soffit

CONVERTING EXISTING CONSERVATORY WITH BOX GUTTER TO ULTRAROOF

When converting an existing conservatory to an Ultraroof, it is important to accommodate for the previous box gutter positions on the conservatory roof when designing the Ultraroof replacement. When the old conservatory box gutter is removed, (either a 165mm or a 265mm), the beam sits on the existing window frames lining up with the internal frame line datum points. This results in a special finishing detail for each case being used, as shown below.

Existing conservatory with inner dwarf wall built in-line with host wall using raised back box gutter.

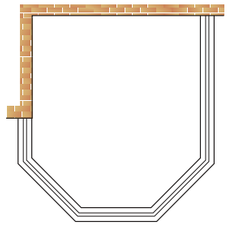

Base plan

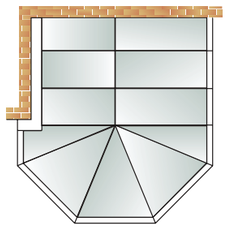

Roof plan

STANDARD SOFFIT

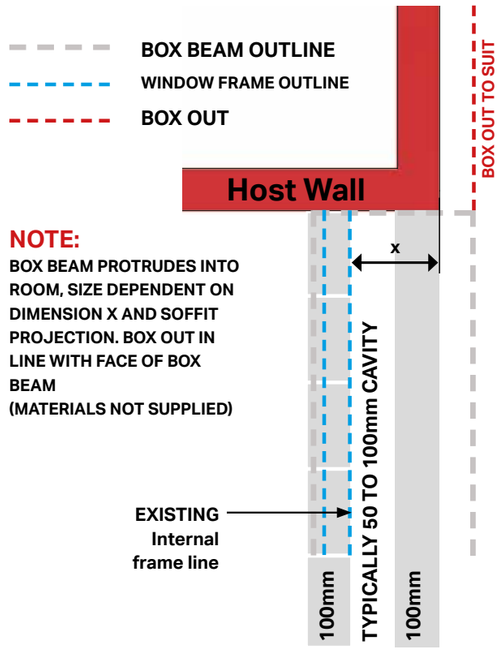

NOTE:
BOX BEAM PROTRUDES INTO ROOM, SIZE DEPENDENT ON DIMENSION X AND SOFFIT PROJECTION. BOX OUT IN LINE WITH FACE OF BOX BEAM (MATERIALS NOT SUPPLIED)

EXTENDED SOFFIT

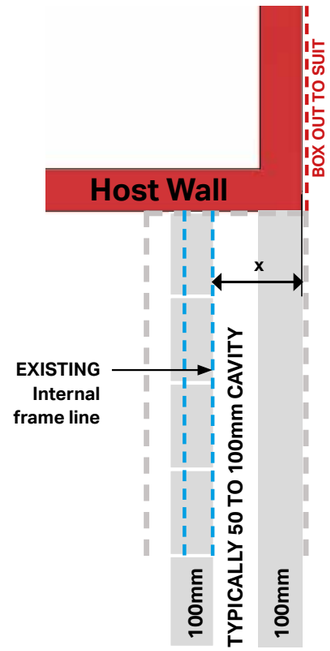

STANDARD SOFFIT BOXING OUT
BOX OUT TO SUIT (MATERIALS NOT SUPPLIED)

EXTENDED SOFFIT BOXING OUT
BOX OUT TO SUIT (MATERIALS NOT SUPPLIED)

STANDARD SOFFIT

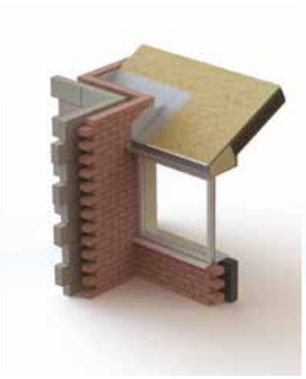

EXTENDED SOFFIT

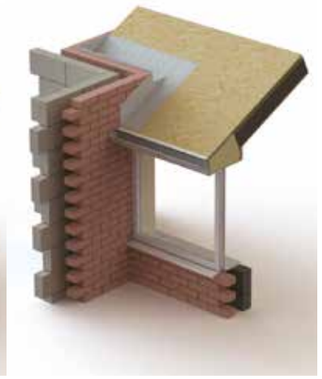

CONVERTING EXISTING CONSERVATORY WITH BOX GUTTER TO ULTRAROOF

Existing in-line 165mm box gutter

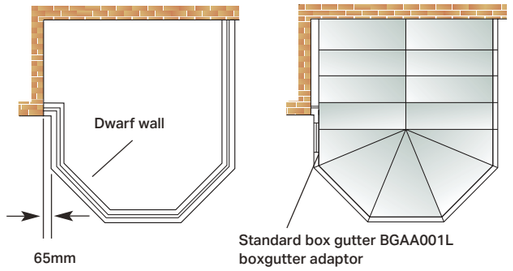

Base plan Roof plan

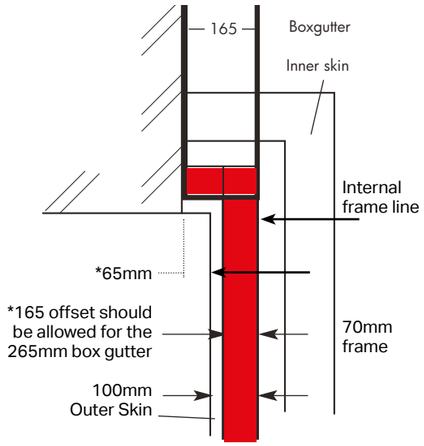

165 BOX GUTTER REPLACEMENT

Standard soffit: The internal frame line will be 165mm from the host wall, this will result in a gap of 69mm down the side of the beam. This gap is packed out with timber at 59mm and 10mm of box gutter insulation. The beam is supported on the wall with abutment bracket and to existing conservatory window frames. A tapered box gutter is added packed 59mm off the host wall.

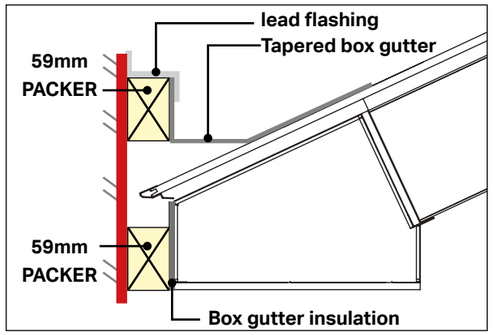

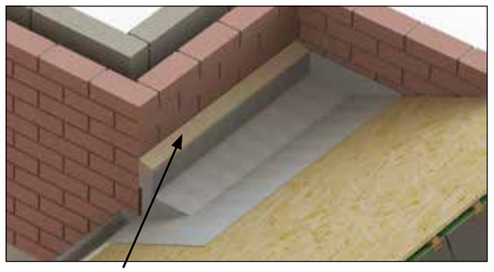

59mm timber packer, lead flash over into tapered box gutter.

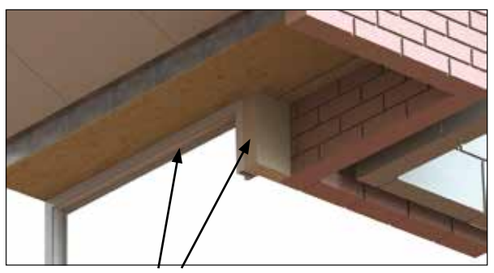

Existing frames and infill

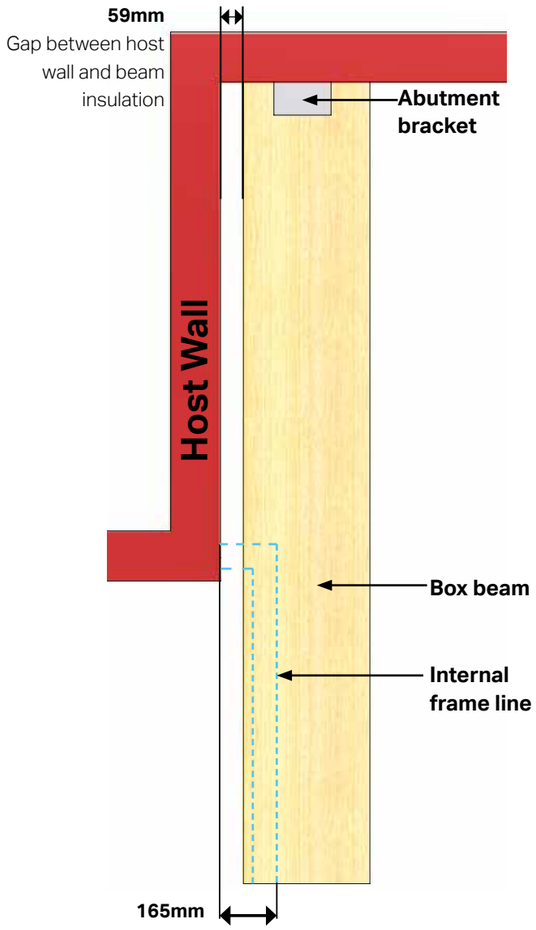

Extended soffit: The internal frame line will be 165mm from the host wall, this will result in the beam overshooting the wall by 42.5mm. The beam is stopped at the point of contact with the wall and an intrusion panel is used along the rest of the length. The beam is supported with an abutment bracket fixed to a timber infill while the panel is supported with an angled panel wall bracket (see diagram below). The intrusion must be cut on site to accommodate the timber infill square to the wall.

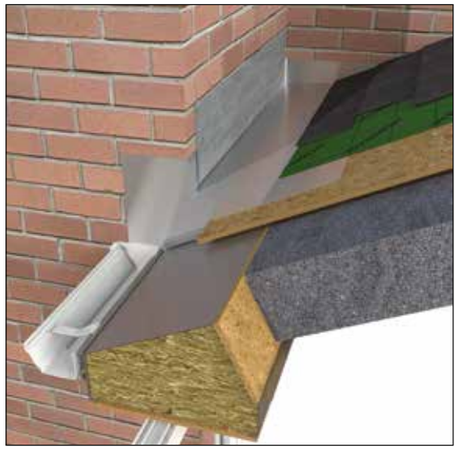

A tapered box gutter is used in this situation, it fits normally and flush with the host wall and roof.

Infill 95 x 362mm In this case infill option is shown as timber. Intrusion panel is cut to accommodate the infill.

Abutment bracket
is fixed to the infill timbers, angled panel bracket fixes to the wall.

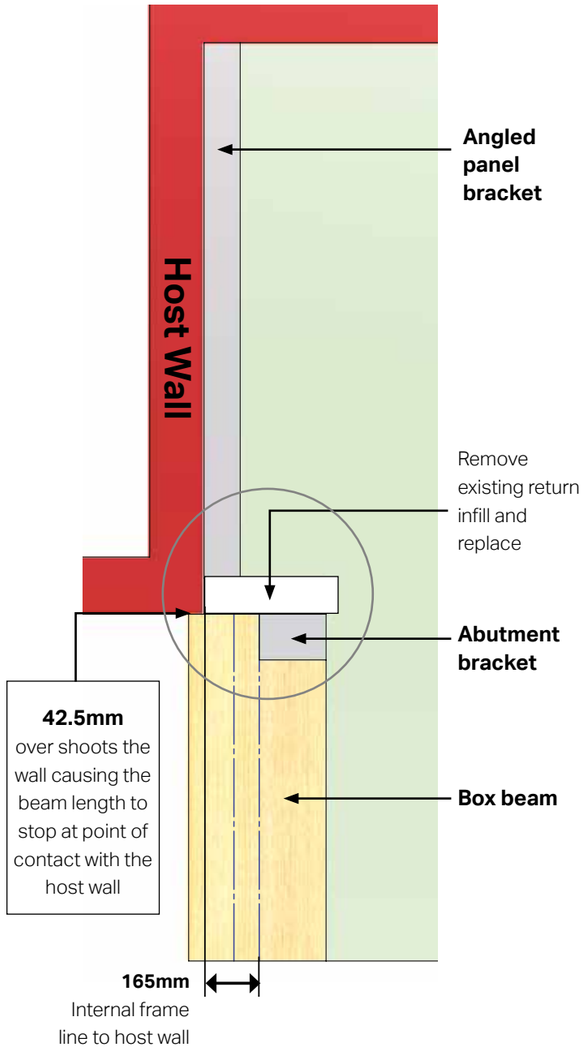

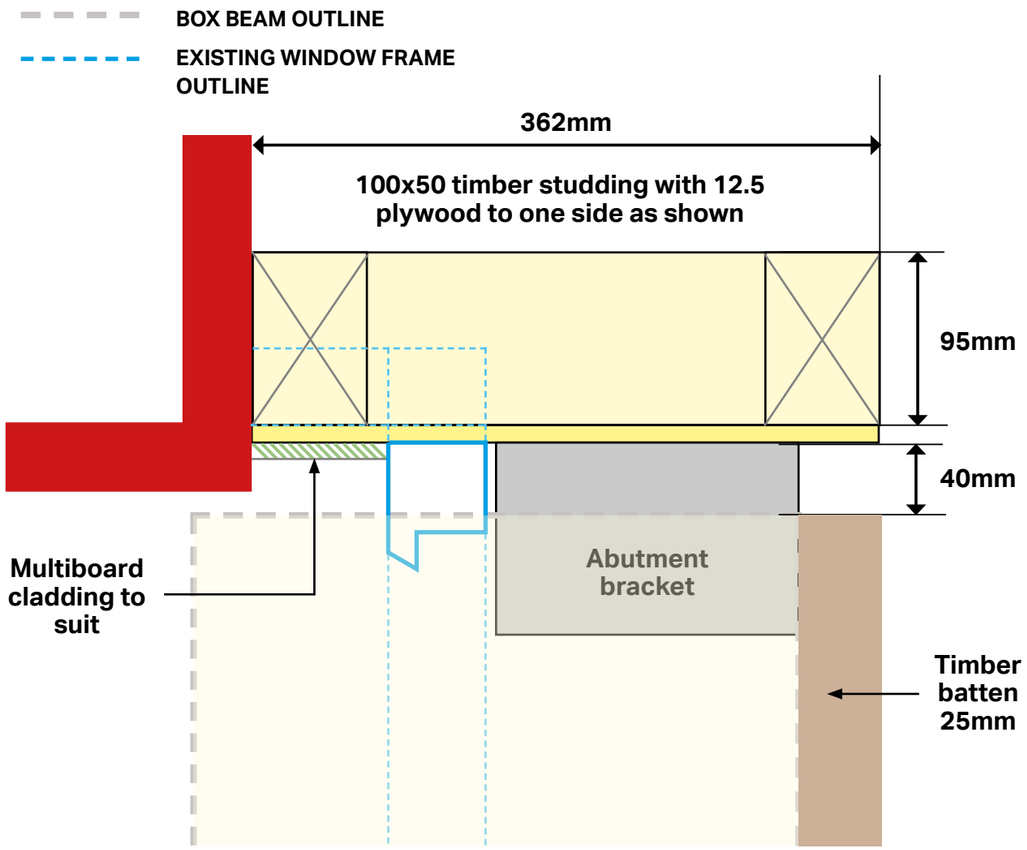

Replace existing frame with 100x50 (MIN) timber studding with 12.5mm plywood to bracket, fixed back to host wall and floor or dwarf wall.

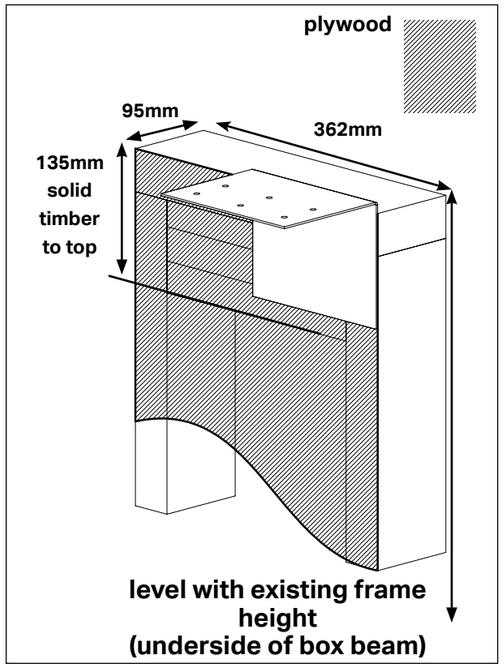

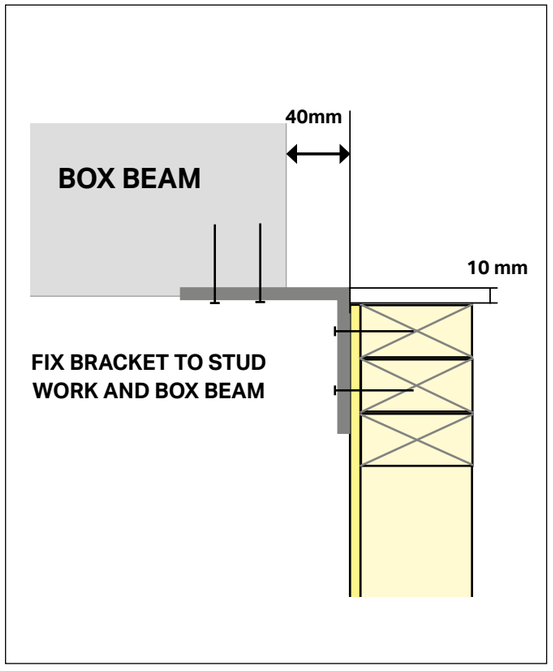

CONVERTING EXISTING CONSERVATORY WITH BOX GUTTER TO ULTRAROOF

265 BOX GUTTERS

Extended soffit: The internal frame line will be 265mm from the host wall, this will result in a gap of 57.5mm down the side of the beam. This gap is packed out with 47.5mm timber and 10mm of box gutter foam. The beam is supported on the wall with abutment bracket, and by fixing to existing conservatory window frames. Finally a tapered box gutter is added, 47.5mm packed off the host wall with timber to line up correctly with the guttering.

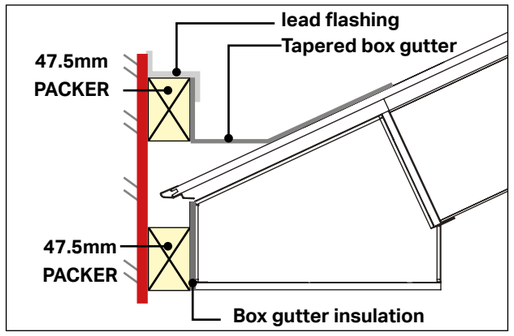

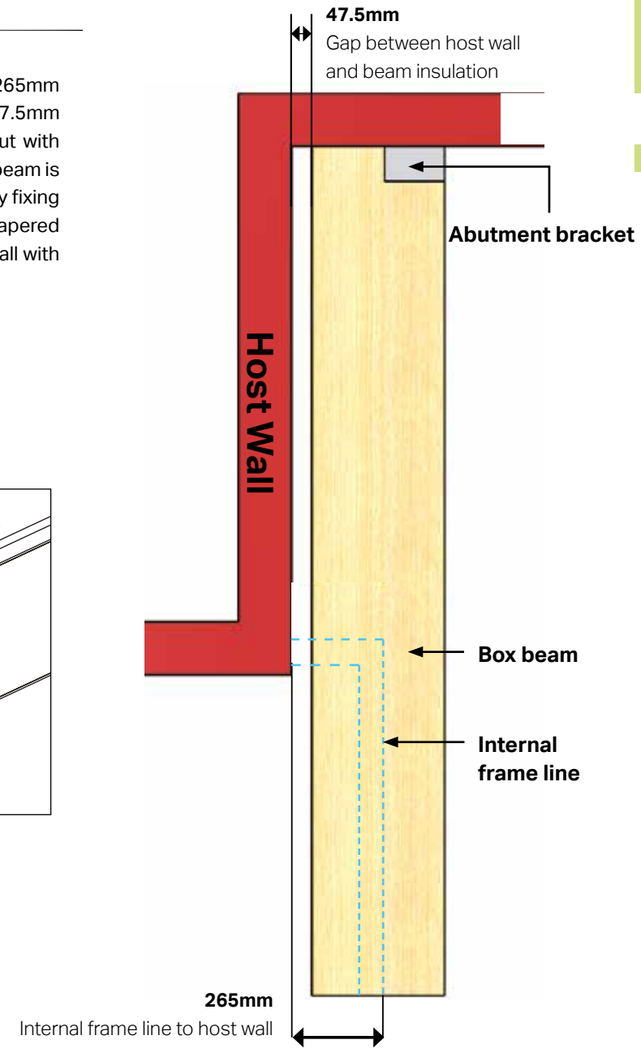

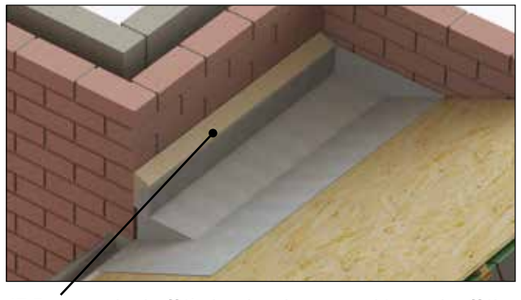

47.5mm packed off timber has been used to pack off the box gutter to line up with the standard gutter.

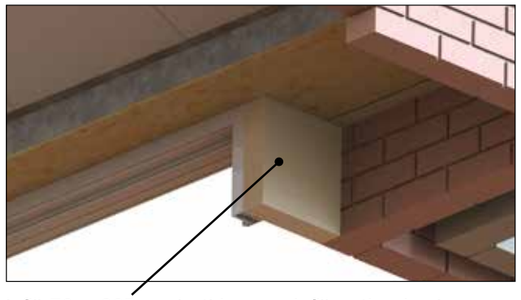

Infill 70 x 265mm In this case infill option is shown as timber.

APPROPRIATE FIXINGS

The correct selection/specification of fixings for Ultraroof is CRITICAL.

We recommend HILTI chemical anchors where specified and expanding anchors in other locations (to resist pull out forces). Using HILTI product codes/descriptions, use a HIT-V 80mm x M8 threaded anchor (stud*) fastened into a 10mm clean drill hole with gun injected mortar or adhesive capsules (with a minimum 80mm embedded) - always rigorously follow the manufacturers guidance www.hilti.com

In addition, we recommends the following alternatives; Fischer M8/M10 masonry injection anchor FIS V Rawl Fixings M8/M10 CFS RM50 or CFS RP30.

* Design load for each stud 2.5kN

CAVITY TRAY ASSESSMENT / VERTICAL DPC REQUIREMENT

It is good practice to undertake a risk assessment to determine IF cavity trays should be retro fitted.

In zones 1 and 2, cavity tray installation is based upon risk assessment - factors include determining if elevation faces prevailing wind, absorbancy of brickwork and monitor joint type. Cavity trays MUST be installed in severe/very severe exposure zones (3 and 4).

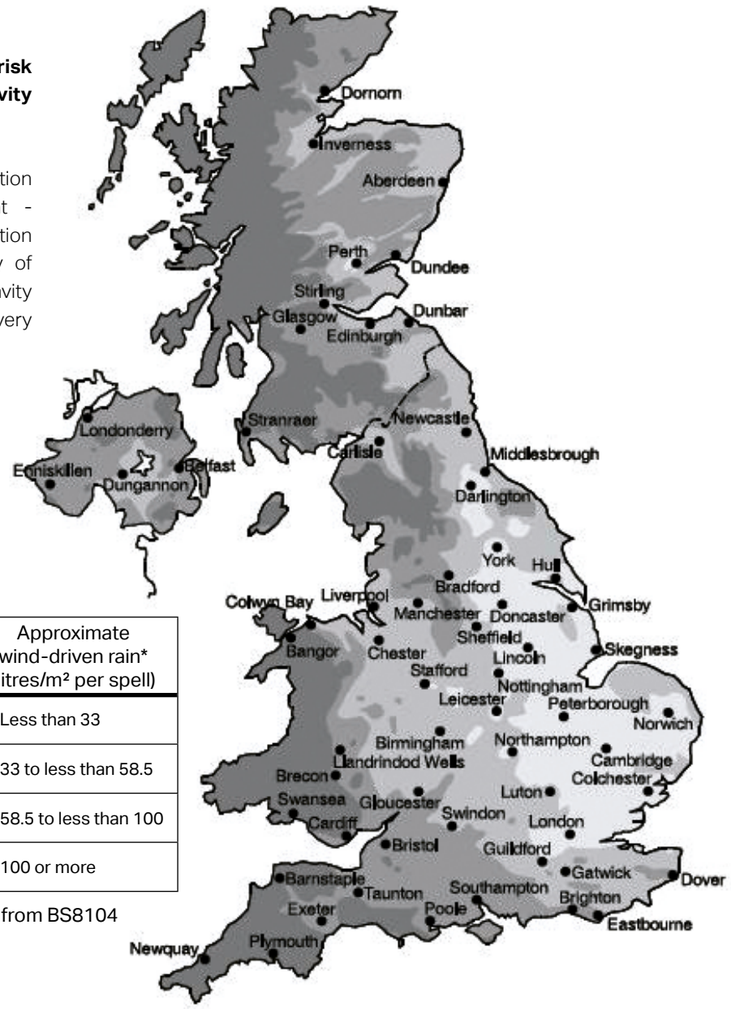

KEY	EXPOSURE ZONES	Approximate wind-driven rain* (litres/m² per spell)
	1 Sheltered	Less than 33
	2 Moderate	33 to less than 58.5
	3 Severe	58.5 to less than 100
	4 Very Severe	100 or more

* Maximum wall spell index derived from BS8104

ACHIEVE 0.12 U-VALUE

Additional Parts Supplied. *Gable situations

60mm PIR

44 X 44mm Timber FBSSB480

44 x 70mm Timber FBTB300

40mm PIR*

5.5 X 70mm Fixings FSW-55-70/10

4.5 X 75mm Fixings NRDS075-25*

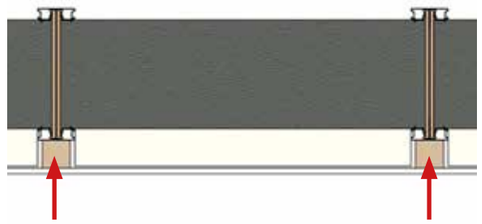
Fix 44 x 4mm battens to steel clips using FSW-55-70/10

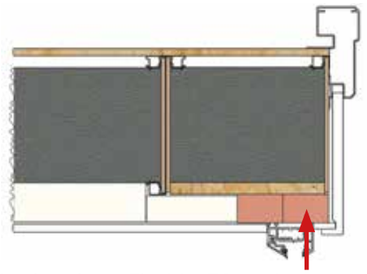
*Gable situations. Fix 44 x 70mm battens to the gable panel using NRDS075-25

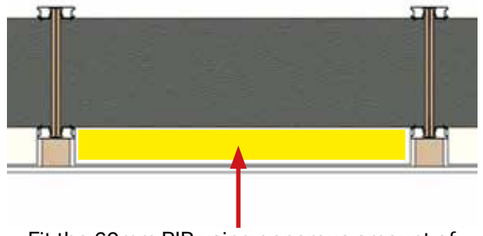
Fit the 60mm PIR using generous amount of silione sealant

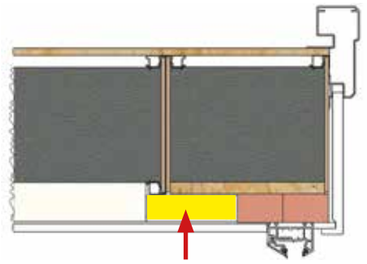
*Gable situations. Fit the 40mm PIR ahjacent to the 44 x 70mm battens, again using silione sealant to secure

Foil backed plasterboard may then be fitted to the timber battens in the normal way.

PLASTERBOARD GUIDELINES

Dry wall bit assembly

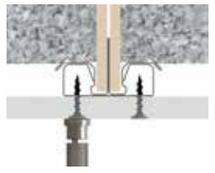
Full Clip Section

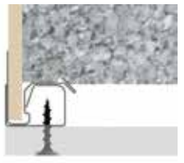

25mm Dry wall screw.
Not Supplied

Dry wall bit.
Not Supplied

We recommend plaster boarding vertically, attaching the plaster board directly to the internal panel clips.

Horizonal butt joints need supporting with a 20mm thick timber batten (not provided) placed between the internal panel clips.

A bead of silicone will hold the batten into position before securing.

Fixing of the plaster board is the responsibility of the plastering team in line with manufacturing recommendations.

PLASTERBOARD GUIDELINES (TO ACHIEVE 0.12 U-VALUE)

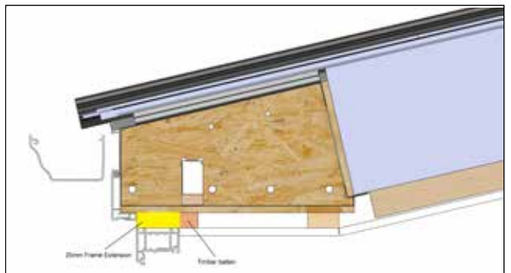

This image is the plaster line detail when at 12.5° using 25mm frame extensions.

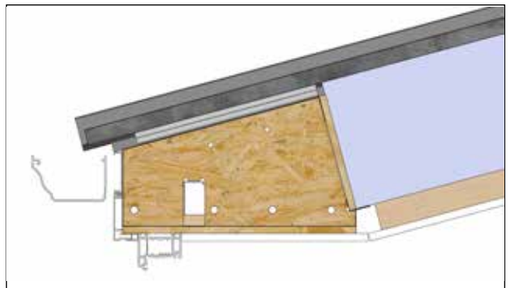

This image is the plaster line detail when at 15°

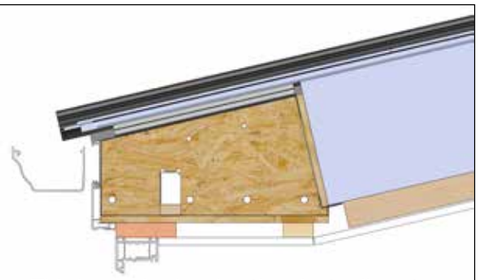

This image is showing the plaster line at 12.5° to 15° using 100 x 25mm timber packer (not supplied)

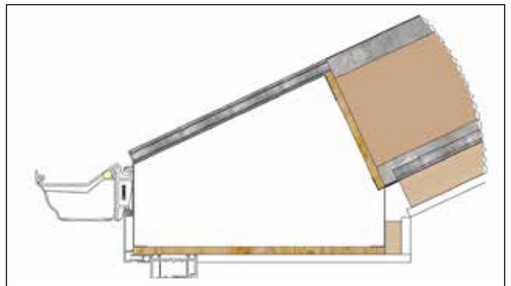

This image is the plaster line detail when at 25°

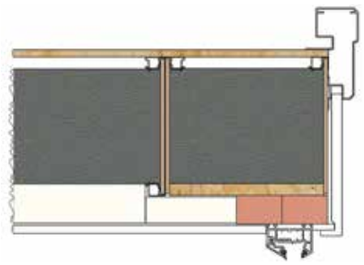

This image is showing the plaster line detail for an standard gable front. 44 x 70mm timber required above the gable frame.

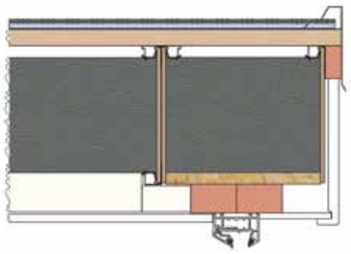

This image is showing the plaster line detail for an extended gable front. 44 x 70mm timber required above the gable frame.

HEIGHT CALCULATOR FOR 0.12 U-VALUE

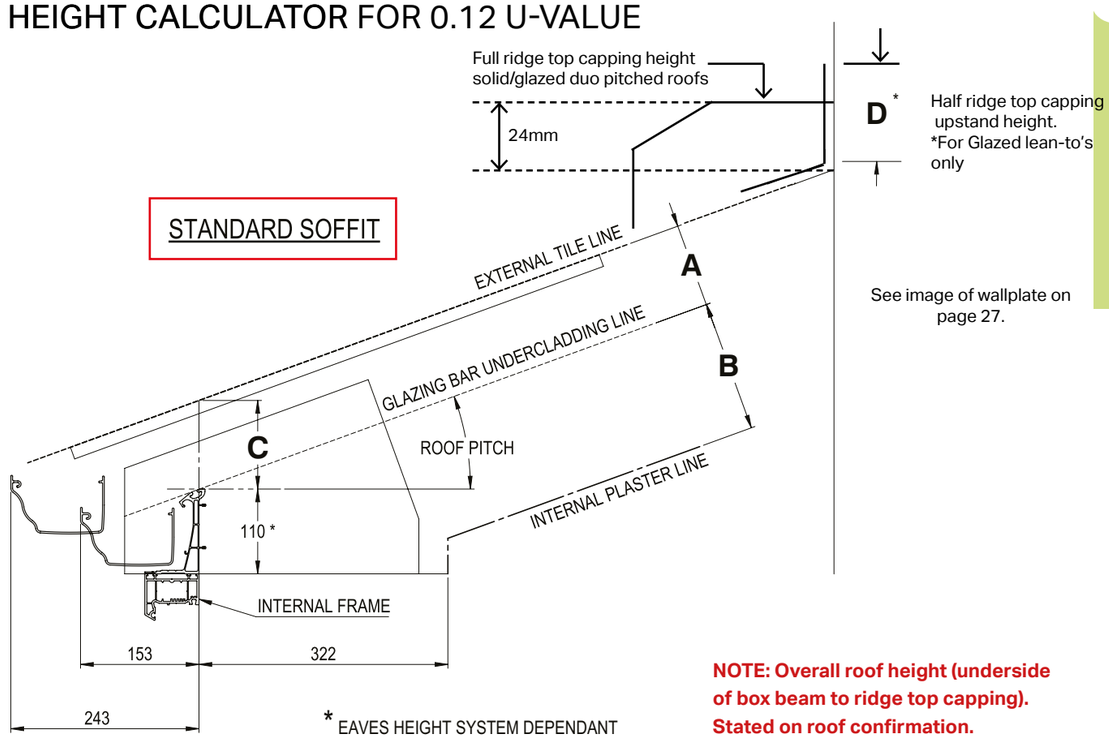

See image of wallplate on page 27.

NOTE: Overall roof height (underside of box beam to ridge top capping). Stated on roof confirmation.

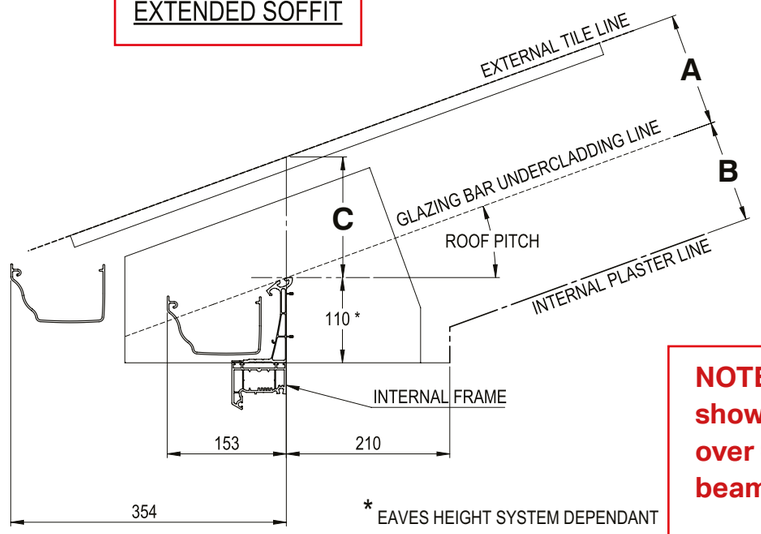

NOTE: Ultraroof shown super imposed over Classic eaves beam for comparison.

STANDARD	A	B	C	D
12.5	97	198	98	96
15	101	195	103	94
20	107	188	114	88
25	114	182	126	82
30	119	177	139	76
35	124	172	154	69
40	128	168	171	61

EXTENDED	A	B	C	D
12.5	121	175	123	96
15	130	166	133	94
20	146	150	154	88
25	161	135	178	82
30	175	121	203	76
35	188	108	232	69
40	200	96	265	61

Ultraframe

Transforming light and space

www.ultraframetrade.co.uk

Job No: 3359 025/26 V15 NRSG001 Ultraroof process

It is Ultraframe's policy to continually seek to improve its products, processes and services, and we reserve the right to change specifications without prior notice. Ultraframe is a trading name of Ultraframe (UK) Limited.